65580

# A GENERAL SYSTEM DESIGN FOR AUTOMATIC BOILER CONTROL

by
Sebati YILMAZ

January, 1997
İZMİR

# A GENERAL SYSTEM DESIGN FOR AUTOMATIC BOILER CONTROL

**A Thesis Submitted to the**
**Graduate School of Natural and Applied Sciences of**
**Dokuz Eylül University**
**in Partial Fulfillment of the Requirements for**
**the Degree of Master of Science in Electrical and Electronics Engineering**

**by**
**Sebati YILMAZ**

**January, 1997**
**İZMİR**

**M.Sc. THESIS EXAMINATION RESULT FORM**

We certify that we have read this thesis and that in our opinion it is fully adequate, in scope and in quality, as a thesis for the degree of Master of Science.

Assist.Prof.Dr. Yavuz ŞENOL
(Advisor)

Assist.Prof.Dr. Erginer UNGAN
(Committee Member)

Assoc. Prof. Dr. Mustafa GÜNDALP
(Committee Member)

Approved by the
Graduate School of Natural and Applied Sciences

Prof.Dr.Macit TOKSOY
Director

# ACKNOWLEDGMENTS

This thesis is a result of three years research on automatic process control systems at the Master of Science Program of Electrical and Electronics Engineering Department,Graduate School of Natural and Applied Sciences of Dokuz Eylül University.

I am indebted to many people for advice and assistance. I would like very much to express my gratitude to my professor Mr. Yavuz Şenol. He freely shared his wisdom and it was my good fortune to have had the opportunity to learn from him.

Special thanks for support and encouragement go to Miss. Feryal Ayaz. Most of the typing was done by her rapidly and accurately. Her skilled help is gratefully appreciated.

I especially wish to acknowledge the valuable support and advice of Mr. Artuna Aysun, General Manager of Associated Industrial Systems and Plants Inc., İzmir.

I would also like to thank Mr. Ömer Haluk Yılmaz, Project and Control Engineer of Turkish Petroleum Refineries Corp., İzmir Refinery, for sharing his library.

Finally, I owe a debt of gratitude to my parents for their encouragement, patience and understanding. A mere "thank you" really cannot make up for the hardships they suffered on account of my whole education.

**Sebati YILMAZ**

# ABSTRACT

An industrial plant that uses steam as a carrier of energy must meet production requirements for both work and heat at the same time and at the minimum cost. Industrial processing plants can significantly reduce the energy cost per ton of product by the application of advanced control and optimization techniques in control systems.

Improvement of automatic control systems should be focused firstly on the "source of energy" -steam boilers. Boiler control system regulates the transfer of energy in a boiler and maintains safe and efficient use of air, fuel and water in the generation of steam.

This thesis advises some prime advanced control and optimization techniques to improve control schemes of the power plants and reduce the cost of energy in return.

# ÖZET

Enerji taşıyıcısı olarak buhardan faydalanan bir sanayi tesisi, hem iş hem de ısı için üretim gereksinimlerini aynı anda ve en az maliyette karşılamak zorundadır. Sanayi tesisleri, kontrol sistemlerine ileri kontrol ve optimizasyon tekniklerini uygulayarak birim üretim için gerekli enerji maliyetini önemli oranda azaltabilirler.

Otomatik kontrol sistemlerdeki iyileştirme çalışmaları öncelikle enerjinin kaynağı olan buhar kazanlarında odaklanmalıdır. Kazan kontrol sistemi, kazan içindeki enerji transferini düzenler ve buhar üretimi için gerekli hava, yakıt ve suyun en verimli ve en güvenli bir şekilde kullanılmasını sağlar.

Bu tez, güç üretim tesislerinin kontrol sistemlerini iyileştirmek ve karşılığında enerji tüketimini azaltmak için bazı birincil ileri kontrol ve optimizasyon tekniklerini önermektedir.

# CONTENTS

**Page**

Contents.....I

List of Tables.....V

List of Figures.....VI

**Chapter One**

**INTRODUCTION**

1. INDUSTRIAL BOILERS.....1

1.1 BOILERS IN THE POWER INDUSTRY.....1

1.2 BOILER EQUIPMENT.....2

1.3 BOILER DYNAMICS.....3

**Chapter Two**

**BOILER CONTROL OBJECTIVE**

2. BOILER EFFICIENCY.....4

2.1 THE ROLE OF SENSORS.....5

2.2 SAFETY INTERLOCKS.....7

## Chapter Three

## AUTOMATIC BOILER CONTROL

3. BASIC BOILER CONTROLS....9

3.1 BOILER PRESSURE CONTROL....9

3.1.1 Feedforward Control of Steam Pressure....10

3.1.2 Fuel Controls....12

3.1.3 Air Flow Measurement and Control....13

3.1.4 Damper and Fan Controls....14

3.1.5 Furnace Draft Control....14

3.1.6 Interaction Between Air Flow and Furnace Pressure....15

3.1.7 Air-Fuel Ratio....16

3.1.8 Air and Fuel Limiting....17

3.2 FEEDWATER CONTROL....19

3.2.1 Single and Two-Element Control Systems....21

3.2.2 Three-Element Control System....22

3.2.3 Feedforward Control of Drum Level....23

3.2.4 Valve Sizing....24

3.2.5 Pump Speed Control....25

3.3 STEAM TEMPERATURE CONTROL....26

3.3.1 Desuperheater Spray Controls....27

3.3.2 Cooling by Excess Air....30

3.3.3 Flue Gas Temperature Effect....30

3.4 INTEGRATION OF LOOPS....30

## Chapter Four

## BOILER OPTIMIZATION

4. WHY OPTIMIZATION?.....31

4.1 EXCESS AIR OPTIMIZATION.....31

4.1.1 Flue-Gas Composition.....33

4.1.2 The Effect of The Fuel Used.....35

4.1.3 Air-Fuel Ratio with Excess Oxygen Trim.....36

4.2 STEAM PRESSURE OPTIMIZATION.....38

4.3 WATER SIDE OPTIMIZATION.....39

4.4 LOAD ALLOCATION.....41

## Chapter Five

## A GENERAL DESIGN FOR AUTOMATIC BOILER CONTROL WITH SINGLE-LOOP CONTROLLERS

5. AUTOMATIC BOILER CONTROL USING PROGRAMMABLE SINGLE-LOOP CONTROLLERS.....42

5.1 CONTROL SYSTEM OVERVIEW.....43

5.2 BOILER MASTER PRESSURE AND OXYGEN DENSITY CONTROL.....44

5.2.1 Feedforward Control and Derivative Action.....45

5.2.2 Oxygen Density Control.....46

5.2.3 Output Tracking Function.....46

5.3 AIR-FUEL RATIO CONTROL INCLUDING CROSS-LIMIT CIRCUIT.....47

5.3.1 Air-Fuel Ratio Compensation.....48

5.3.2 Cross-Limit Circuit.....49

5.4 DRUM LEVEL AND FEEDWATER CONTROL.....50

5.4.1 Feedwater Control.....50

5.4.2 Single-Element Control.....51

5.4.3 Feedforward Computation.....52

5.4.4 Three-Element Control.....52

5.5 MAIN-STEAM TEMPERATURE CONTROL.....52

5.5.1 Feedforward Control Computation.....53

5.5.2 Reset Wind-up Protection.....53

5.6 CONTROLLER INTERLOCKS.....56

**Chapter Six**

**DISCUSSIONS AND CONCLUSIONS**

6. DISCUSSIONS AND CONCLUSIONS.....57

References.....61

Appendices.....62

# LIST OF TABLES

**Page**

TABLE 2.1 FLOW SENSOR ERRORS ON BOILERS.....7

# LIST OF FIGURES

**Page**

FIGURE 1.1 AN INDUSTRIAL BOILER WITH MEASUREMENT POINTS.....2

FIGURE 2.1 INCREMENTAL STEAM COSTS CURVE.....4

FIGURE 2.2 THE MAIN IN-LINE INSTRUMENTS USED ON A BOILER.....5

FIGURE 3.1 BASIC BOILER CONTROL LOOPS.....10

FIGURE 3.2 FIRING RATE DETERMINATION USING FEEDFORWARD LOOP WITH FEEDBACK TRIM.....11

FIGURE 3.3 FUEL DEMAND SPLIT BETWEEN FUELS ON CLOSED-LOOP BASIS.....12

FIGURE 3.4 OIL FLOW CONTROL FOR RECIRCULATING BURNER PROVIDED WITH STEAM ATOMIZATION.....13

FIGURE 3.5 PARALLEL CONTROL OF FORCED AND INDUCED DRAFT FANS.....15

FIGURE 3.6 PROPORTIONAL COMPENSATION WITH ACCURATELY MEASURED FLOWS.....17

FIGURE 3.7 CLOSED-LOOP AIR-FUEL RATIO CONTROL.....17

FIGURE 3.8 CLOSED-LOOP WITH MANUALLY ADJUSTED RATIO STATION.....17

FIGURE 3.9 PARALLEL CLOSED-LOOP CONTROL WITH AIR AND FUEL LIMITING.....18

FIGURE 3.10 SHRINK AND SWELL EFFECT ON EVAPORATING TUBES.....20

FIGURE 3.11 RESPONSE RELATIONSHIP AMONG LOAD, FEEDWATER FLOW AND DRUM LEVEL IN A PROPERLY DESIGNED SYSTEM.....21

FIGURE 3.12 TWO-ELEMENT FEEDWATER CONTROL SYSTEM.....21

FIGURE 3.13 THE EFFECT OF MISMATCHING BETWEEN STEAM FLOW TRANSMITTER AND VALVE FLOW CHARACTERISTICS.....22

FIGURE 3.14 THREE-ELEMENT FEEDWATER CONTROL SYSTEM.....23

FIGURE 3.15 FEEDFORWARD CONTROL OF DRUM LEVEL.....24

FIGURE 3.16 HEAD CURVE FOR FEEDWATER VALVE SIZING.....25

FIGURE 3.17 FEEDWATER PUMP ON SPEED CONTROL.....26

FIGURE 3.18 STEAM TEMPERATURE CONTROL.....27

FIGURE 3.19 DESUPERHEATER CHARACTERISTICS.....28

FIGURE 3.20 DESUPERHEATER SPRAY CONTROL SYSTEM.....28

FIGURE 3.21 CASCADE CONFIGURATION FOR CONTROLLING THE DEAUPERHEATER CONTROL VALVE.....29

FIGURE 4.1 BOILER LOSSES A FUNCTION OF EXCESS AIR (TOP) THE MOST EFFICIENT BOILER OPERATION (BOTTOM).....32

FIGURE 4.2 FUEL SAVING POTENTIALS IN A BOILER WITH OPTIMUM CONDITIONS.....33

FIGURE 4.3 THE COMPOSITION OF THE FLUE GAS.....34

FIGURE 4.4 THEORETICAL RELATIONSHIP BETWEEN LOAD AND OXYGEN.....34

FIGURE 4.5 EXCESS OXYGEN VS. BOILER LOAD.....35

FIGURE 4.6 EXCESS OXYGEN AND EXCESS AIR CORRECTION.....35

FIGURE 4.7 AIR-FUEL RATIO CONTROL WITH EXCESS OXYGEN TRIM..36

FIGURE 4.8 FEEDFORWARD CONTROL SYSTEM THAT AUTOMATICALLY MAINTAINS EXCESS AIR DURING UPSETS.....37

FIGURE 4.9 EXCESS OXYGEN TRIM CHARACTERIZATION FOR LOAD VARIATIONS.....37

FIGURE 4.10 STEAM PRESSURE OPTIMIZATION TYPES.....38

FIGURE 4.11 THE OPTIMIZED FLOATING OF STEAM SUPPLY HEADER....39

FIGURE 4.12 THE RATE OF BLOWDOWN.....40

FIGURE 5.1 THE DESIGNED CONTROL SYSTEM OVERVIEW.....43

FIGURE 5.2 BOILER MASTER PRESSURE AND OXYGEN DENSITY CONTROLLER....44

FIGURE 5.3 DELAY TIME COMPENSATION USING DERIVATIVE SIGNAL....45

FIGURE 5.4 BOILER LOAD VS. DEAD TIME IN OXYGEN DENSITY MEASUREMENT....46

FIGURE 5.5 AIR-FUEL RATIO CONTROLLER....47

FIGURE 5.6 OBTAINING THE OPTIMUM AIR-FUEL RATIO FROM GX DATA....48

FIGURE 5.7 DRUM LEVEL AND FEEDWATER CONTROLLER....50

FIGURE 5.8 DRUM LEVEL CHARACTERISTICS FOR RAPID LOAD CHANGES....51

FIGURE 5.9 DRUM LEVEL REVERSE RESPONSE....51

FIGURE 5.10 WATER INJECTION FOR MAIN-STEAM TEMPERATURE CONTROL....53

FIGURE 5.11 MAIN-STEAM TEMPERATURE CONTROLLER....54

FIGURE 5.12 STEAM FLOW VS. SECONDARY SUPERHEATER OUTLET TEMPERATURE (TOP). STEAM FLOW VS. GX OUTPUT (BOTTOM)....55

FIGURE 5.13 RESET WIND-UP PROTECTION CIRCUIT....55

FIGURE 6.1 HEAT LOSS GRAPH....59

FIGURE 6.2 COMBUSTION EFFICIENCY....60

# CHAPTER ONE

# INTRODUCTION

## *1. INDUSTRIAL BOILERS*

The production of heat was one of man's first technical accomplishment; its utilization remained relatively primitive until rather recently. The use of steam as a prime mover made possible the Industrial Revolution of the 18th century. The development of large steam generator made possible the electrical age of the 20th century. Today's manufacturing plants, large buildings and comfortable houses are possible only because of electricity, process steam and central heating plants.

Boilers are found everywhere and the stack and chimney have become the universal symbol of the prosperity of industry and of the heat and power that give it life.

## *1.1 BOILERS IN THE POWER INDUSTRY*

The power industry constitutes a large-scale system encompassing hydroelectric, thermal and nuclear power generation plants, transmission and sub-station facilities to distribute power.

A particular characteristic of the industry is that, while demand for power fluctuates, since no means of storing electricity in commercial quantities has been devised, as a consequence, generated power has to exactly respond to consumption demand. The implication for power plant instrumentation is that the control results have to be extrernely precise and responsive.

Conventional thermal power plants generate electricity through the combustion of coal, petroleum and natural gas. The working medium to affect the energy conversion from fuel to power in a thermal plant is steam. A boiler produces steam, the steam turns a turbine and the turbine turns an electricity generator. After the steam has performed its work in the steam turbine, it is converted back to water in a converter and returned to the boiler.

Boilers are not only used in power industry, but also used in all kind of manufacturing industries such as petrochemical, iron and steel, food and beverage, sugar, pulp and paper, etc.

## *1.2 BOILER EQUIPMENT*

Boilers are available in two basic designs; fire-tube and water-tube. Fire-tube boilers are generally limited in size to approximately 12 t/h and 17 kg/cm2 saturated steam[4]. Although, these are noted for their ability to respond to changing demands, their size and pressure limitations preclude their use in large industrial facilities. Because of thermodynamic considerations, boilers should produce steam at high pressure and temperature to realize a maximum work efficiency. These conditions are achievable only with the water-tube boilers, hence they were given prime consideration in this thesis.

Steam boilers are used industrially both as a power source and in processing. A steam boiler consists of a furnace where air and fuel are combined and burned to produce combustion gases and a water-tube system the contents of which are heated by these gases. The tubes are connected to the steam drum where the generated water vapor is withdrawn. If superheated steam is generated, the steam from the drum is passed through the superheater tubes which are exposed to combustion gases. Figure 1.1 shows a typical boiler arrangement with measurement points for control.

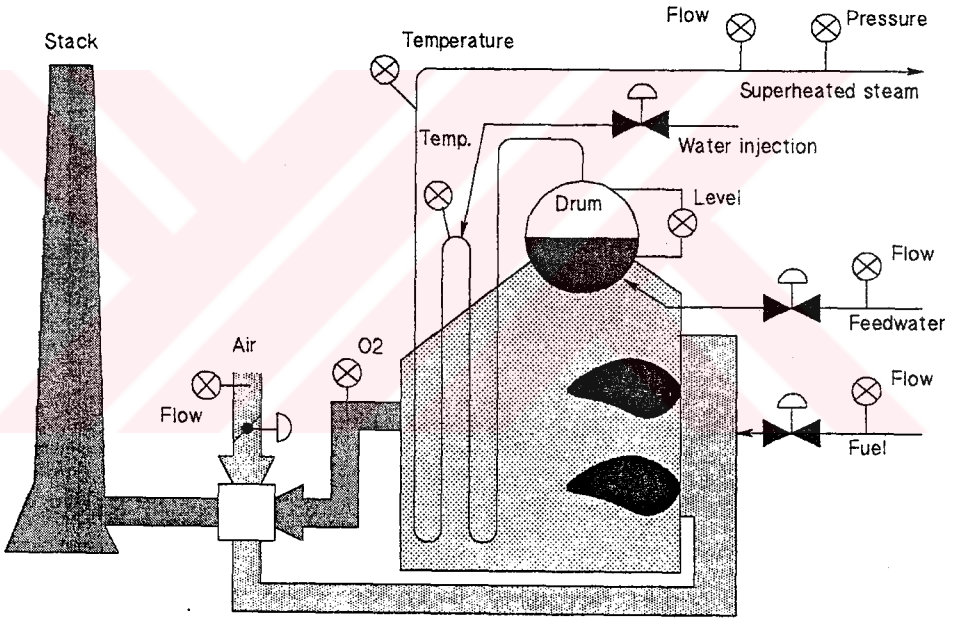


**Figure 1.1 An Industrial Boiler with Measurement Points**

Steam boilers are referred drum-type (circulation) boilers in this thesis. Very large, supercritical pressure boilers are the once-through type and are found only in the largest electric generating plants.

A steam boiler outlet may be connected to a header in parallel with other boilers or directly to a single steam user. The boiler may be controlled by pressure or flow depending upon the process requirements. The load on a steam boiler refers to the amount of steam demanded by the steam users.

The boiler must follow the needs of the plant in its demand for steam and its control system must therefore be capable of satisfying rapid changes in load. Load changes can be a result of rapidly changing process requirements or cycling control equipment. Whereas, load

may be constant and steady over prolonged periods, the utility system must have sufficient turn-down to stay in operation at reduced capacities as portions of the plant may be shut down. This consideration usually leads to a greater turn-down requirement for the boilers than for any other portion of the plant. This is desired to maximize boiler efficiency as well.

### *1.3 BOILER DYNAMICS*

Boiler response to load changes is usually limited by both equipment design and dead-time considerations. Usually the maximum rate of load change that can be handled is from 20% to 100% per minute. This limitation is due to the maximum rates of change in burner flame propagation and to the shrink/swell effects on the water level. The period of oscillation of a typical boiler is between 2 and 5 minutes[4]. This is the result of a dead-time of 30 to 60 seconds. The transportation lag in the boilers is partially due to the displacement volume of the furnace. For example, if the air-fuel ratio is changed, the furnace volume will have to be displaced before the flue gas composition can reflect that change. The lower the air flow (the lower the load), the longer it will take to displace this fixed volume. Therefore, dead-time increases as load is lowered on a boiler.

The transportation lag described above is only one component of the total dead-time. The oxygen analyzer also contributes to the total delay because of its location and its flyash filter. In addition to the dead-time contribution of the instruments, another important dead-time component is caused by cross-limited parallel metering. This is a safety feature guaranteeing that no change in the firing rate (up or down) can result in a "fuel-rich" mixture. The consequence of this feature is that when a signal is received to increase the firing rate, it will first increase the air flow; fuel flow will be allowed to rise only afterward. The total dead-time of a boiler can be reduced if the cross-limited safety system is disabled when the amount of change in the firing rate is small.

Another way to reduce dead-time and thereby to increase boiler response is to use feedforward loops. The firing rate demand signal can be made more responsive by feedforward of steam flow which responses to load changes faster than steam pressure. Similarly, the induced draft loop can be made more responsive by adding feedforward of the forced draft position. In this system, as soon as the air flow into the furnace changes, the out flow is also modified in the same direction so that furnace draft pressure is relatively unaffected. Each of these loops will be discussed in detail in the following chapters. Chapter 2 presents the boiler control objective and supplies the general safety interlock logic. Chapter 3 deals with automatic boiler control principles and basic boiler control loops. Chapter 4 focuses on various optimization techniques. Chapter 5 is devoted to the design of a general automatic boiler control system using single-loop programmable controllers. Chapter 6 outlines automatic boiler control concept and discusses the predicted control results.

# CHAPTER TWO

# BOILER CONTROL OBJECTIVE

## *2. BOILER EFFICIENCY*

The measure of the ability of a boiler to transfer heat given it by a furnace to the water and steam is the "boiler efficiency". This always takes into account the furnace performance and sometimes that of a superheater, reheater, economizer and air-preheater. In measuring efficiency, it is not usually practical to separate burner, furnace and boiler efficiencies. The efficiency of a boiler is considered to be the combined efficiency of its elements.

The purpose of optimization is to continuously maximize the boiler efficiency, as variations occur in the load, fuel, ambient and boiler conditions.

The boiler efficiency is influenced by many factors. A fully loaded large boiler that is clean and properly tuned (with blowdown losses and pump and fan operating costs disregarded) is expected to have the following efficiencies[2];

1. *88% on coal with 4% excess oxygen*
2. *87% on oil with 3% excess oxygen*
3. *82% on gas with 1.5% excess oxygen.*

Boiler efficiencies seldom exceed 90% or drop below 65%. Efficiencies will tend to vary with individual design and with loading, as shown in Figure 2.1. Efficiencies will also vary as

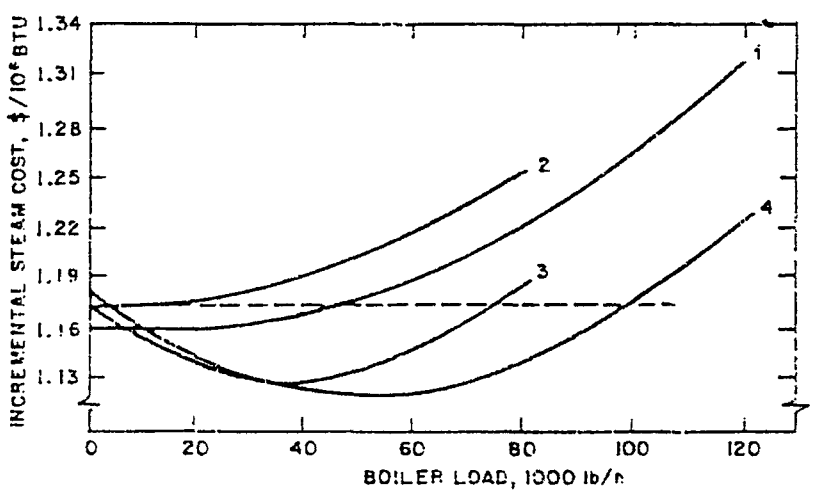


**Figure 2.1 Incremental Steam Costs Curve**

efficiency loss can result from a 2% increase in excess oxygen, or from about a 28 °C increase in flue gas temperature.

If the efficiency is determined on the basis of flue gas composition, steam temperature and fuel type, the error will be lower. Boiler efficiency equations can consider as many as 7 sources of heat loss and require up to 44 pieces of input data. If the lesser factors are omitted, the efficiency can be calculated using the following equation[2]:

$$E=100[1-10^{-3}(0.22+K^{n}y/(1-y/0.21))\ (Ts-Ta)-\Delta Hc/Hc] \qquad \text{Equation 2.1}$$

where y is the mole fraction of oxygen in the flue gas and $K^{n}$ is a coefficient assigned to each fuel: 1.01 for coal, 1.03 for oil and 1.07 for natural gas. The term ΔHc/Hc is about 0.02 for coal, 0.05 for oil and 0.09 for gas. The terms Ts and Ta are the stack and ambient temperatures.

## *2.1 THE ROLE OF SENSORS*

The normal on-line requirements for steam boilers are to control steam pressure within ±1% of desired pressure; fuel-air ratio within ±2% of excess air (±0.4% of excess oxygen) based on a desired "load versus excess air" curve; steam drum water level within ±1 inch of desired level; and steam temperature (where provision is made for its control) within ±5.6 °C of desired temperature. In addition, the efficiency of boiler should be monitored within ±1%[2].

In order to reach these performance goals, is necessary to install accurate sensors and to make sure that the load does not change more than 20% of full scale per minute and that there are no boiler design problems limiting this ability. Since the various loops tend to interact, it is recommended to integrate the loops into an overall system both during design and when the loops are being field-tuned.

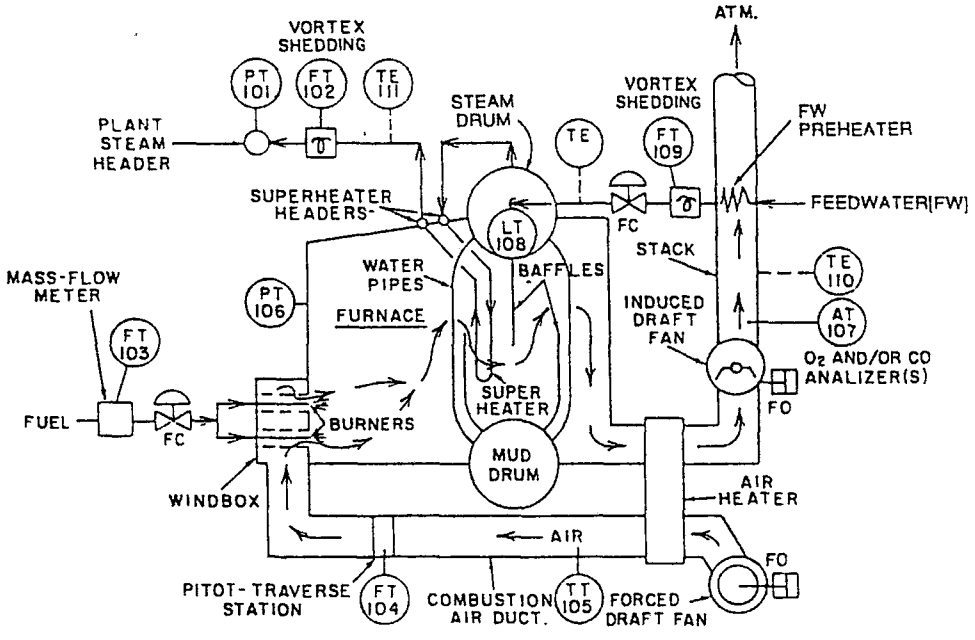


**Figure 2.2 The Main In-line Instruments Used on A Boiler**

Figure 2.2 shows the in-line instruments used on a boiler. The most important sensors are flow detectors, which provide the basis for both material and heat balance controls. For successful control of the air-fuel ratio, combustion air flow measurement is important. In the past, it was impossible to obtain ideal flow detection conditions. Therefore, the practice was to provide some devices in the flow path of combustion air or combustion gases and to field-calibrate them by running combustion tests on the boiler.

These field tests, carried out at various boiler loads, used fuel flow measurements (direct or inferred from steam flow) and measurements of percent of excess air by gas analysis; they also used the combustion equations to determine air flow. Because what is desired is a relative measurement with respect to fuel flow, the air flow measurement is normally calibrated and presented on a relative basis.

Flow versus differential pressure characteristics, compensations for normal variations in temperature and variations in desired excess air as a function of load-all are included in the calibration. The desired result is to have the air flow signal matched the steam or fuel flow signals when combustion are as desired. The following sources of pressure differential are normally considered[1].

1. Burner differential (windbox pressure minus furnace pressure).
2. Boiler differential (differential across baffle in combustion gas stream).
3. Air heater differential (gas side differential).
4. Air heater differential (air side differential).
5. Venturi section or flow tube (installed in stack).
6. Piezometer ring (at forced draft fan inlet).
7. Venturi section (section of forced draft duct).
8. Orifice segments (section of forced draft duct).
9. Air foil segments (section of forced draft duct).

Of these, the most desirable are the last four, because they use a primary element designed for the purpose of flow detection and measure flow on the clean-air side. Table 2.1 lists some better flow sensors, such as the multipoint thermal flow probe or the area averaging pitot stations provided with "hexcel" type straightening vanes and with membrane-type pressure balancing d/p cells. These represent major advancers in combustion air flow detection. This table shows the measurement errors that can be anticipated. Unfortunately, as the flow is reduced, the error-in percentage of actual measurement-increases in all cases except the first two. With linear flowmeters, the error, increases linearly with turndown. Therefore, the thermal flowmeter error increases ten fold at a turndown of 10:1. In case of nonlinear flowmeters, the error increases exponentially with turndown. Therefore, at a turndown of 10:1, the orifice or pitot error increases one-hundredfold and causes these instruments to become useless. This situation can be alleviated somewhat by using two d/p cells on the same element or by using smart units.

Based on the data in Table 2.1, if the boiler efficiency is to be monitored on the basis of time-averaged fuel and steam flows, the lowest error that can be expected is around 1%. Similarly, the air-fuel ratio cannot be measured to a greater accuracy than the air flow. At high turndown ratios, this error can be very high. Considering that a 2% reduction in excess oxygen will increase the boiler efficiency by 1%, both the accurate measurement and the precise control of air flow is essential in boiler optimization.

The demand for the sensor accuracy elsewhere is not so stringent. Standard instrumentation allows for the control of steam pressure within ±1%, furnace pressure within ±0.1%, water level within ±1 inch of desired level and steam temperature within ±5.6 °C[8].

**Table 2.1 Flow Sensor Errors on Boilers**

| *Flow Streams Measured* | *Type of Flowmeter* | *Inaccuracy (% of flow)* | | | | |
|---|---|---|---|---|---|---|
| | | *At 10%* | *33%* | *100%* | *Rangeability* | *Limitation* |
| Fuel (oil) | Coriolis mass flow | 0.5 | 0.5 | 0.5 | 25:1 | Not for gases |
| Steam and Water | Vortex shedding | 0.5-1 | 0.5-1 | 0.5-1 | 20:1 | Min Re=20000 Max T=400 °C |
| | Orifice | NG* | 2-5 | 1 | 3:1 | Rangeability can be increased using smart d/p cells |
| Air | Area averaging pitot traverse station | NG | 2-10 | 0.5-2 | 3:1 | |
| | Multipoint thermal | 5-20 | 2-5 | 1-2 | 10:1 | Dual range unit required |
| | Piezometer ring | NG | 3-20 | 2-3 | 3:1 | Cannot be used below 25% of max. flow |

*NG=Not Good

## *2.2 SAFETY INTERLOCKS*

Operations relating to safety, startup, shutdown and burner sequencing are basically digital in nature and operate from inputs such as contact closures.The basic safety interlocks are as follows[3]:

*1. Purge Interlock*: Prevents fuel from being admitted to an unfired furnace until the furnace has been thoroughly air purged.

*2. Low Air Flow Interlock and/or Fan Interlock*: Fuel is shut off upon loss of air flow and/or combustion air fan or blower.

*3.Low Fuel Supply Interlock*: Fuel is shut off upon loss of fuel supply that would otherwise result in unstable flame conditions.

*4. Loss of Flame Interlock:* All of fuel is shut off upon loss of flame in furnace and/or fuel to an individual burner is shut off upon loss of flame to that burner.

*5. Fan Interlock:* Stop forced draft upon loss of induced draft fan.

*6. Low Water Interlock:* Shut off fuel on low water level in boiler drum.

*7. High Combustibles Interlock:* Shut off fuel on highly combustible content in the flue gases. Where the fans are operated in parallel, an additional interlock is required to close the shut off dampers of either fan when it is not in operation. This is necessary to prevent air recirculation around the operating fan.

Automatic start-up sequencing for lighting the burners and for sequencing them in and out of operation is common. This is accomplished at present by Burner Management System (BMS).

# CHAPTER THREE

# AUTOMATIC BOILER CONTROL

## *3. BASIC BOILER CONTROLS*

Figure 3.1 shows a possible configuration of the basic boiler loops and the tie-in points for optimization. Although, this is a well-designed control system, it is just one of many possible configurations. Boiler size, steam pressure and number and type of fuel(s) all can vary, necessitating variations in this scheme. The major loops as numbered in Figure 3.1 are;

*1. Combustion Control:* The purpose of combustion control is to maintain constant steam pressure at the boiler outlet so that the fuel flow satisfied steam evaporation requirements (energy balance).

*2. Feedwater Supply Control:* Feedwater control is used to keep the quantity of water in the boiler constant (mass balance). In drum type boilers, the water level in the drum is used as an index of the amount of water in the boiler. Drum water level is therefore the control target and generally controlled by feedwater control valves or by the speed of feedwater pumps.

*3. Steam Temperature Control:* Changes in steam temperature can have a great impact on turbine performance as well as on boiler and turbine service life. Therefore, the steam temperature at the superheater outlet of boiler is kept constant (emergency balance).

## *3.1 BOILER PRESSURE CONTROL (COMBUSTION CONTROL)*

Fuel combustion in the boiler furnace requires that an adequate amount of air be supplied to the furnace. Combustion control system can be thus broken down into fuel flow control and combustion air flow control subsystems. The interrelationships of these two subsystems necessitate the use of the fuel-air ratio controls. For safety purposes, fuel addition should be limited by the amount of available combustion air and combustion air may need minimum limiting for flame stability.

The steam drum pressure is an indication of the balance between the in-flow and out-flow of heat. Therefore, by controlling the steam supply pressure, a balance between the demand for steam (process load) and the supply of steam (firing rate) can be established. A changed in steam pressure will result from a change in firing rate only after a delay of a few seconds to a minute depending on the boiler and the load level. Therefore, as will be seen later, feed

forward control can improve pressure control by adjusting fuel as soon as a load change is detected instead of waiting for pressure to change first.

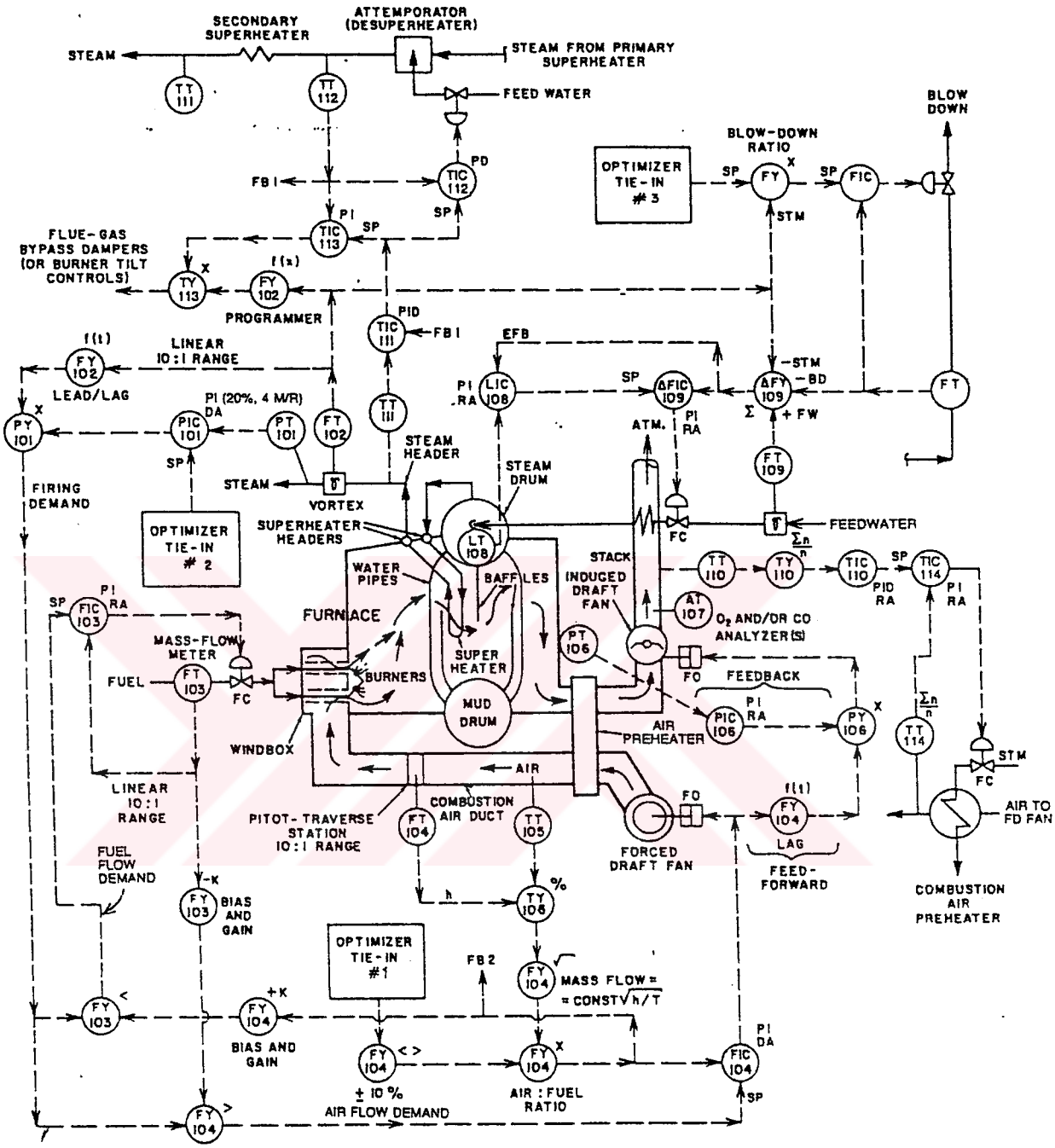


**Figure 3.1 Basic Boiler Control Loops**

### 3.1.1 Feedforward Control of Steam Pressure (Fuel Flow Control)

In order to control steam pressure, basically steam pressure is detected and compared against a set point value and the fuel flow is controlled so as to minimize the difference between the detected pressure and the set pressure. The steam pressure signal is called the ***master signal*** and the control signal that is the set point value of fuel flow controller is called the ***master control signal.***

The actual steam flow at any point is not necessarily a true indication of demand. For example, an increase in steam flow caused by increased firing rate should not be interpreted as a load increase - this would create a positive feedback loop, capable of destabilizing the boiler. According to Shinskey[1], the true load on a boiler can be approximated by $\sqrt{h/p}$, where $h$ is the differential developed by a flow element and $p$ is the steam pressure.

Figure 3.2 describes a boiler - pressure control system using feedforward model. Fuel flow is set proportionally to the estimate of load $\sqrt{h/p}$. Since boilers contain water of a large specific heat and a large amount of steel, there is a time lag, which is called the ***time constant*** of boiler heat capacity, before changes in steam flow (or fuel flow) are reflected in steam pressure changes. Therefore, dynamic compensation is applied in the form of a lead-lag function to help overcome the heat capacity in the boiler.

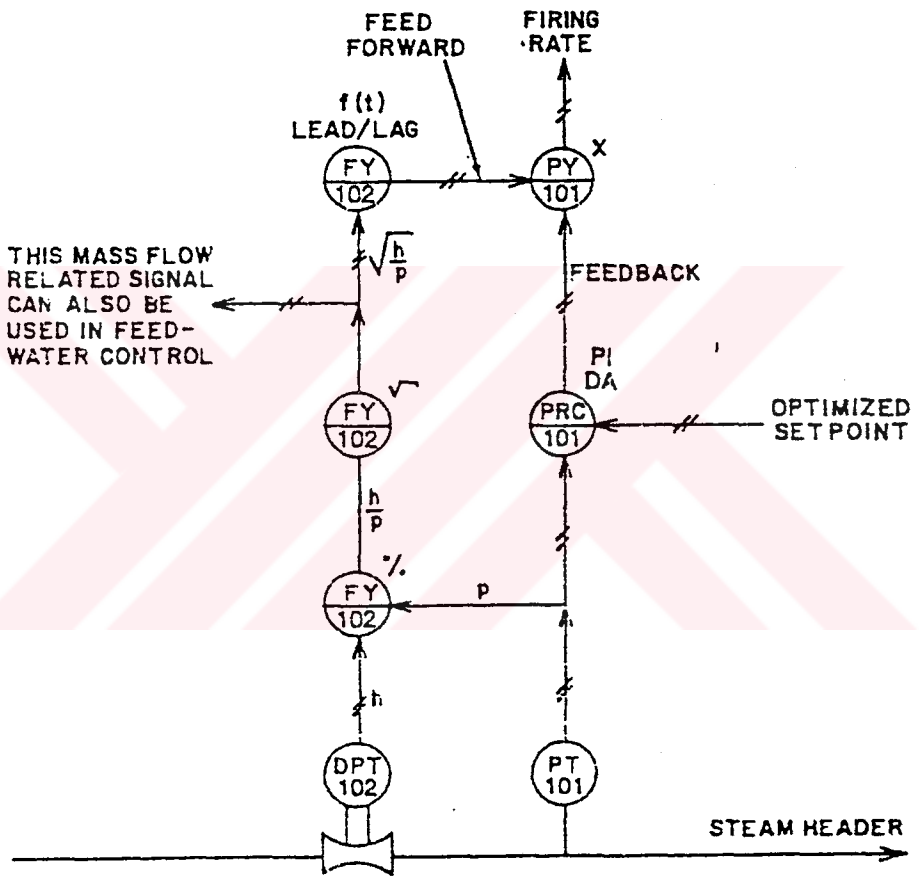


**Figure 3.2 Firing Rate Determination Using Feedforward Loop with Feedback Trim**

The pressure controller adjust the ratio of firing rate to estimated load, to correct for inaccuracy of the model and variations in heat of combustion of fuel. The multiplier also changes the gain of the pressure feedback loop proportional load. This feature is valuable in that boilers seem more difficult to control at lower loads because of lower velocities.

The firing rate control system shown in Figure 3.2 is basically the control system shown in Figure 3.1 combined control drawing. Here, loops 101 and 102 measure the pressure and flow of the generated steam respectively. The flow transmitter (FT-102) is a high

rangeability and linear device, capable of accurate measurements even at low loads. The master control signal is generated in a feedback manner by the pressure controller PIC-101. In order to speed up response of this loop to load changes, a feedforward trim is added. This trim is based on steam flow, because this flow is the first to respond to load changes. Therefore, as soon as the demand for steam changes, FY-102 will trim the master control signal, without waiting for the steam pressure to change.

### 3.1.2 Fuel Controls

The primary boiler fuels are oil and gas. The control of gas and fuels requires the simplest controls, since they are easily measured and require little more than a control valve in the fuel line. A valve positioner capable of providing a linear relationship between flow and control signal is desirable. In case in which better than 3:1 turndown and high measurement accuracy is desired, the coriolis mass flowmeters should be used instead of orifices.

When it is desired to fire the fuels in a predetermined ratio to each other regardless of load, a signal splitter can be used. Figure 3.3 illustrates the controls required when the fuel demand is split between two fuels on a closed-loop (automatic) basis. A manually adjustable signal splitter can also be used on an open-loop basis. The instruments shown (biasing stations) provide the means of manual control plus the ability of automatic control, with bias of one fuel with respect to the other.

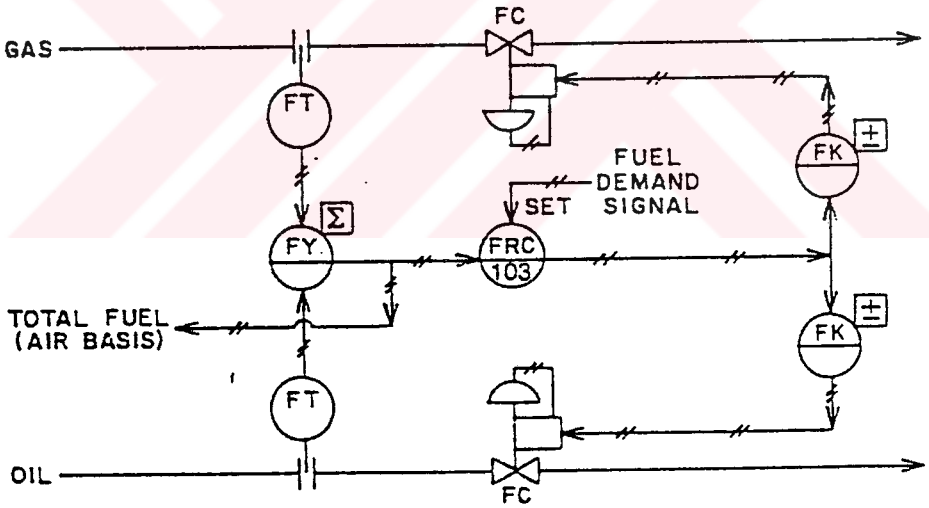


**Figure 3.3 Fuel Demand Split between Fuels on Closed-loop Basis**

In the case of oil fuels, proper atomization at the burner, and therefore complete combustion, will be achieved only if the oil is kept at constant pressure and viscosity. When heavy residual oils are burned, they must be continuously circulated past the burner and back as shown in Figure 3.4. The difference between the readings of two coriolis mass flowmeters can signal the net flow to the burner. The burner backpressure is controlled by the control valve in the recirculating line, where as the flow controller setpoint is adjusted by the firing rate demand signal. The firing rate is controlled by an alteration in the opening of the burner orifice. Atomizing steam is ratioed to the firing rate and the heating steam is modulated to keep the fuel viscosity constant[1].

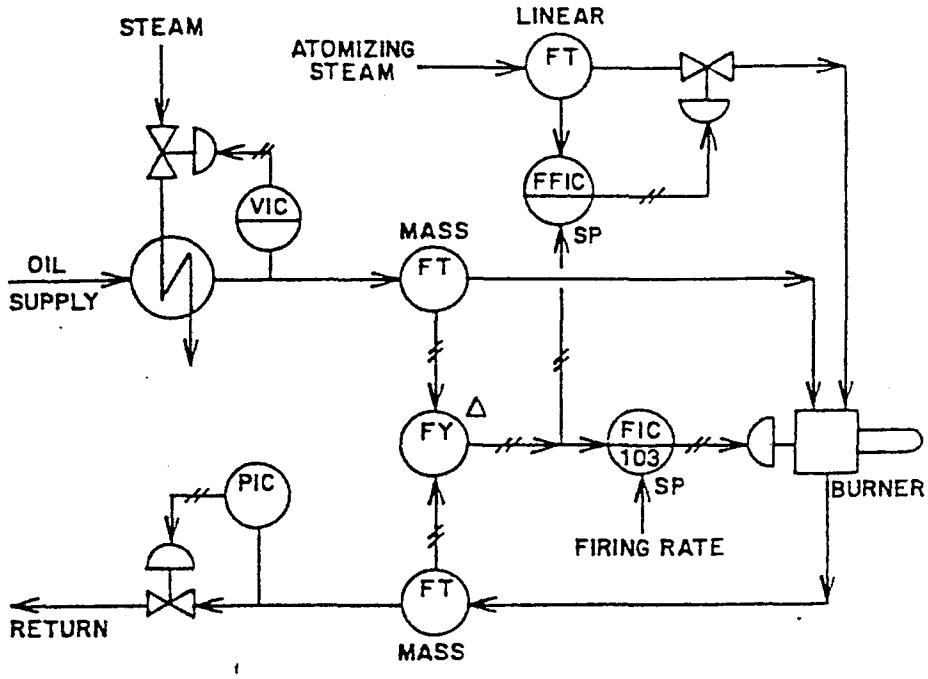


**Figure 3.4 Oil Flow Control for Recirculating Burner Privided with Steam Atomization**

### 3.1.3 Air Flow Measurement and Control

Combustion air for steam boilers may be supplied by induced draft (suction fan at boiler outlet or stack draft), forced draft (pressure fan at inlet), or a combination of forced and induced draft known as balanced draft fans. With balanced draft boilers, a slight negative pressure is maintained in the furnace.

In the control of combustion air (if there are both forced and induced draft fans), one fan should be selected for basic control of air flow and the other assigned to maintaining the draft pressure in the furnace. The following discussion is based on a single air flow source (fan) per boiler. Balanced draft and its effects on air flow control will be discussed later.

For successful control of the air-fuel ratio, combustion air flow measurement is important. In the past, it was impossible to obtain ideal flow detection conditions. Therefore, the practice was to provide some device in the flow path of combustion air or combustion gases and field calibrate it, by running combustion tests on the boiler. These field tests carried out at various boiler loads, used fuel flow measurements and measurements of percent excess air by gas analysis, and they also used the combustion equations to determine air flow. Since we are concerned with relative measurement with respect to fuel flow, the air flow measurement is normally calibrated and presented on a relative basis. Flow versus differential pressure characteristics, compensations for normal variations in temperature and variations in desired excess air as function af load are included in the calibration. The desired result is to have the

air flow signal matched the steam or fuel flow signals when combustion conditions are as desired.

Combustion can be thought of as oxidation of fuels and the air flow needed for theoretical oxidation (combustion) in boilers, however, complete combustion is not achieved unless slightly more than the theoretical air flow is supplied. The ratio of theoretical air flow to actually supplied air flow is called the ***excess air ratio*** and is expressed by $\mu$ [8]. In actual boiler operation, the excess air ratio is found by the following equation, where the percentage of $O_2$ in the exhaust gas is measured[8].

$\mu=21/(21-O_2)\%$ Equation 3.1

where 21 is volumetric ratio of oxygen in air. When $\mu$ decreases, heat loss due to unburned fuel increases. When $\mu$ increases, on the other hand, heat is lost up through the chimney, with a resulting decline in boiler thermal efficiency.

### 3.1.4 Damper and Fan Controls

Control devices for boiler air flow control are dampers or fans. However, dampers are undesirable as final control elements because of their hysteresis, non-linearity and leakage. The use of variable-speed or variable-pitch fans does more than conserve air transportation energy, thereby reducing the overall boiler operation[3]. Their other advantages are the better linearity, hysteresis, dead-band and leakage characteristics that they can provide. For these reasons, the overall control diagram in Figure 3.1 shows fan controls.

### 3.1.5 Furnace Draft Control

Whenever both forced draft and induced draft are used together, at some points in the system the pressure will be the same as that of the atmosphere. Balanced-draft boilers are not normally designed for positive furnace pressure. Hence, the furnace pressure must be negative to prevent hot gas leakage. Excessive vacuum in the furnace, however, produces heat losses through air infiltration. The most desirable condition is thus one in which there is a very slight (approximately 0.1 in$H_2O$, or 25 Pa) negative pressure at the top of the furnace.

Pressure taps for measuring furnace pressure may be located some distance below the top. Because of the chimney effect of the hot furnace gases, pressures measured below the top of the furnace will be lower (0.008 kPa/m) of elevation. Thus, if the pressure tap is 6m below the top of the furnace, the desirable pressure to maintain is approximately 0.3 in$H_2O$ (0.075 kPa) vacuum[3].

In the case of a balanced draft boiler, the maintenance of constant furnace pressure or draft keeps the forced and included draft in balance. The purpose of this balance is to share properly the duty of providing combustion air and to protect furnaces not designed for positive pressure operation.

The measurement of furnace draft produces a noisy signal, limiting the loop gain to relatively low values. In order to provide control without undue noise effects, it is desirable to use a full span of approximately 4 to 5 in$H_2O$[3]. This is normally a compound range such as -4 to +1 or -3 to +2 in$H_2O$. Even with this span and with a setpoint of -0.1 to -0.3 in$H_2O$, the controller gain can still exceed 1.0. In some cases, it may be necessary to use integral control algorithm only to stabilize the loop[5].

### 3.1.6 Interaction Between Air Flow and Furnace Pressure

Stability problems and interactions may occur in the overall system because of measurement lags. It is recommended that the pressure transmitter connection to the boiler furnace is made with pipe at least 25mm in diameter because of very low pressures involved.

Either the forced or the induced draft fan can be used to control the furnace draft, with the other fan performing the basic air flow control function. Interaction cannot be completely eliminated between these two loops, but it can be minimized by system design shown in Figure 3.5.

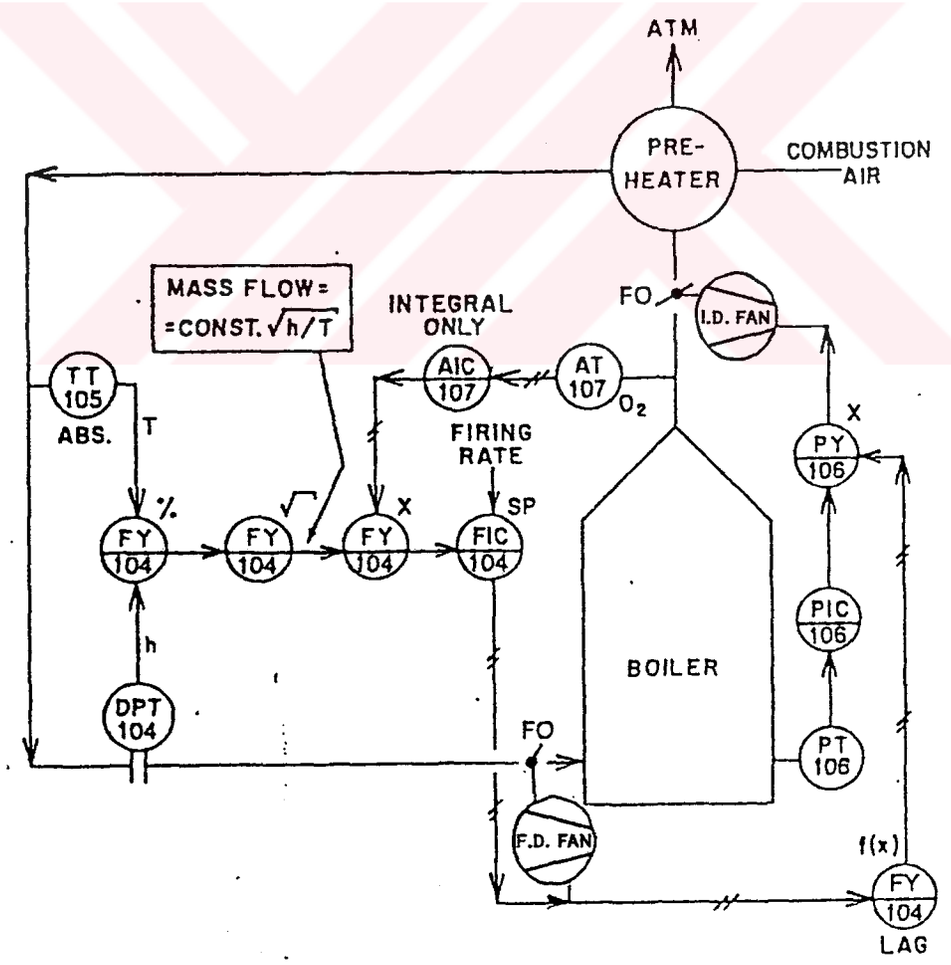


**Figure 3.5 Parallel Control of Forced and Induced Draft Fans**

The common rule is that the air flow should be measured and controlled on the same side (air or combustion gas) of the furnace to minimize interaction between the flow and pressure loops.

If the combustion air is preheated, then its temperature will vary substantially and compensation is needed. The mass flow of air is related to $\sqrt{h/T}$, where $h$ is a differential across a restriction and $T$ is absolute temperature[3]. This loop is shown in Figure 3.5 together with an excess oxygen trim on the air flow controller. The air flow and furnace pressure interact, since the both induced and forced draft fans affect both flow and pressure. Interaction can be reduced by connecting the two fans in parallel and using the furnace pressure as a trimming signal. This can also be used to overcome problems resulting from noisy furnace pressure signals and slow response caused by the series relationship between flow and pressure loops. In this arrangement, the air flow controller controls the both fans speeds equally, and the furnace pressure corrects for any mismatch. The furnace pressure can respond faster to a change in the downstream fan speed-up and therefore a dynamic lag (FY-104) is provided. In the combined control system shown in Figure 3.1 basically the same control concept is implemented. The air flow is also detected by a high rangeability flowmeter (FT-104), which is compensated for temperature variations. The air fuel-ratio is adjusted by applying again to the air flow (FY-104). The continuous optimization of this ratio is one of the major tools of boiler optimization. The air flow controller throttles the speed or blade pitch of the forced draft fan and the signal to the induced draft fan in a feedforward manner. Dynamic compensation is provided by the lag module (FY-104). This, as soon as the air flow to the furnace is changed, the outflow will also start changing. This improves the control of the furnace draft, as the feedback pressure controller (PIC-106) will need only to trim the feed forward signal at PY-106 to account for measurement and other errors.

### 3.1.7 Air - Fuel Ratio

When the controls for air-fuel ratio are considered, one point is very important. Because of the combustion gas velocity through the boiler, for safety reasons the air-fuel ratio should be maintained on an instant by instant rather than a time-averaged basis[6].

As a general rule (except for the case of very slow changing boiler load), air and fuel should be controlled in parallel rather than in series. This is necessary because a lag of only one or two seconds in measurement or transmission will seriously upset combustion conditions in a series system. This can result in an alternating periods of excess and deficient combustion air. Consequently, the discussion here will be limited to parallel air and fuel control systems. The simplest control of fuel-air ratio is a system with simple proportional compensation. This can be done by balancing fuel burner pressure to the differential produced between windbox and furnace pressures.

In the system shown in Figure 3.6, flows are measured as accurately as possible and are in a flow controller to readjust the primary loop through the combining relay (FY). In this system, operator uses the bias provision of the panel station (FK) to compensate for variations in fuel pressure, temperature or heating value or for air temperature, humidity or other factors.

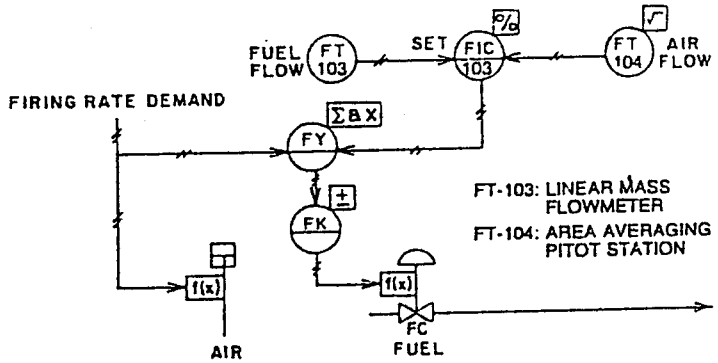


**Figure 3.6 Proportional Compensation with Accurately Measured Flows**

Since this system is open-loop controlled, the undesirable consequence is that fuel disturbances need master controller action for correction, and the air and fuel loops can interact with each other. The effect of interaction and disturbances in the fuel and air control loops can be minimized by the use of closed-loop fuel and air control that features self-linearizing and noninteracting.

The system shown in Figure 3.7 is the highest degree of sophistication provided with high turndown flowmeters and signal transmission that does not contribute a time lag. In this system, air flow and fuel flow signals for proper air-fuel ratio are matched.

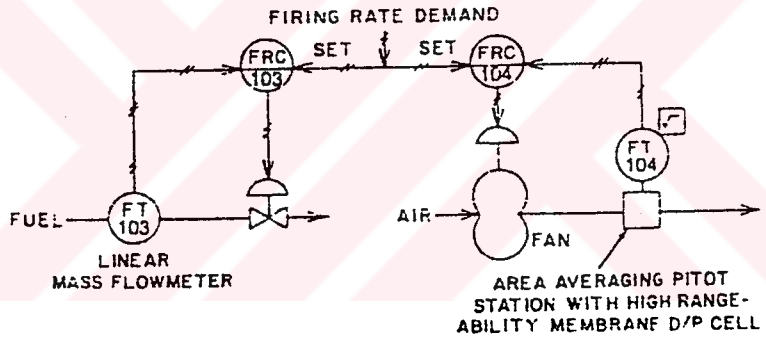


**Figure 3.7 Closed-loop Air-Fuel Ratio Control**

Here, a manual adjustment of the air-fuel ratio can be provided by inserting a manual ratio station to avoid changing the gain of the loop. This system is illustrated in Figure 3.8. If ratio adjustment is manual, flue gas analyzers such as $O_2$, CO or combustibles analyzers should be provided for operator guidance or as feedback control of the ratio desired. A measurement of percent oxygen in the combustion gases is most necessary for operator guidance when multiple fuels are being burned or when fuel properties vary[6].

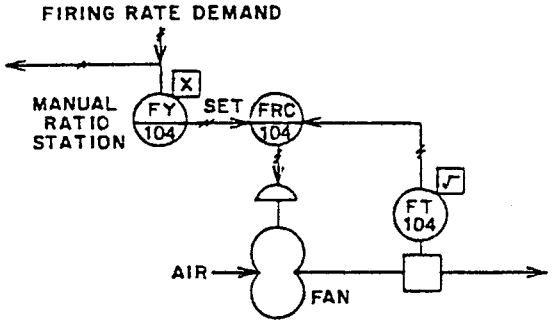


**Figure 3.8 Closed-loop with Manually Adjusted Ratio Station**

## 1.8 Air and Fuel Limiting

Maintaining the correct air-fuel ratio also contributes to limiting the fuel rate to available air and limiting air minimum and maximum to fuel flows, air leading fuel on load increase, and air lagging fuel on load decrease. This arrangement also protect against a fan failure or a sticking fuel valve. This is so called cross-limiting. The following limiting actions are desirable for safety purposes[9]:

*1. Limiting fuel to available air.*

*2. Minimum limiting of air flow to match minimum fuel flow or to other safe minimum limit*

*3. Limiting minimum flow to maintain stable flame.*

These limiting features are simple to apply with the basic noninteracting, self-linearizing system in Figure 3.7 Figure 3.9 shows the necessary modifications that can provide these features without upsetting the setpoint of the air-fuel ratio. The following is accomplished by the illustrated system:

1. If actual air flow decreases below firing rate demand, then the actual air flow signal is selected to became the fuel demand by low selector (FY-103).

2. If fuel flow is at minimum and firing rate demand further decreases, actual fuel flow becomes the air flow demand, because FY-104A will select the fuel signal if it is greater than firing rate demand signal. A manual air flow minimum is also available to come into use through FY-104B, such that if fuel flow signal drops below the HIC setting, this manual setting will become the air flow setpoint.

3. Fuel is minimum limited by separate direct-acting pressure or flow regulator (FCV).

The combined control system shown in Figure 3.1 also shows air and fuel limiting on its air-fuel ratio system, but it is configured differently from the scheme shown in Figure 3.9. Figure 3.1 does not shown a minimum air setter (HIC), and the air-fuel ratio relay (FY-104) is located on the measurement signal to the air flow controller (FIC-104) and its ratio setting is not adjusted manually (HIC) but is optimized by "tie-in #1". Otherwise, the two loops are quite similar.

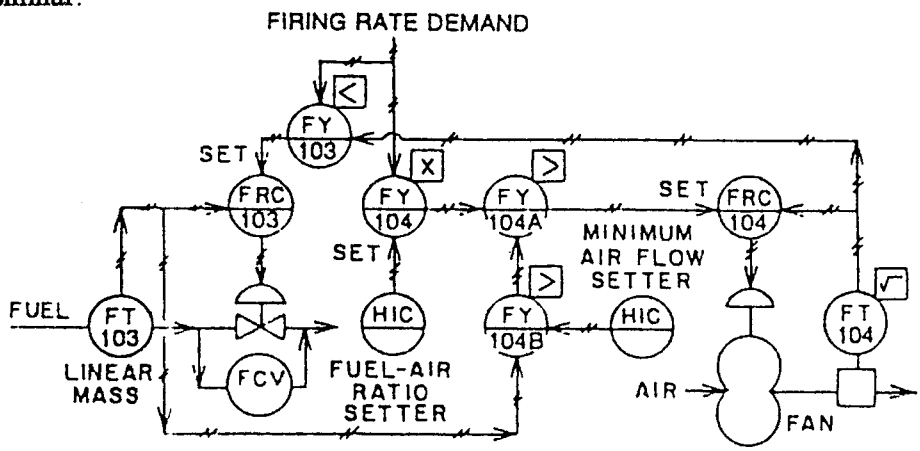


**Figure 3.9 Parallel Closed-loop Control with Air and Fuel Limiting**

(FIC-103) is the smaller of either the biased air flow or the firing rate (FY-103). The setpoint of the air flow controller (FIC-104) is selected as the higher of either the biased fuel flow or the firing rate (FY-104).

These low and high selectors provide cross-limited parallel metering system. The coefficients in the system are adjusted so that the pairs of signals provided to the high and low selectors are equal under steady-state conditions. When the firing rate demand signal increases, the high selector provides it as an air flow setpoint while the low selector transmits the air flow process variable as the fuel flow setpoint. Air flow, therefore, starts to increase immediately; fuel flow rises only after the air flow responds. When the firing rate demand signal decreases, the low selector provides it as the fuel flow setpoint while the high selector transmits the fuel flow process variable as the air flow setpoint. Fuel flow decreases immediately; air flow drops only after fuel flow responds. Likewise, if a disturbance causes air flow to drop, the low selector transmits the air flow signal to the fuel flow controller. Fuel flow then decreases regardless of the steam demand, preventing a fuel-rich condition. The disadvantage of the system is that overall response is constrained by the slower of air flow or fuel flow response to changing demand signals. For example, if the firing rate demand rises slightly, the system first speeds the fan up to increase air flow; then, as air flow rises, the system opens fuel valve.

The bias and gain modules FY-103 and 104 were added in Figure 3.1 to improve the system response to small load changes. These reduce the effective fuel flow signal presented to the high selector while raising the air flow variable provided to the low selector.

Under steady-state conditions, the firing rate demand is presented as the set point to both controllers. Likewise, if the firing rate demand signal changes only slightly, it will still be transmitted by both signal selectors and will cause the air and fuel flows to increase or decrease accordingly. If the changes in firing rate demand exceed the offset introduced by the bias and gain modules, the system will operate like a cross-limited system. As a result, fuel flow can respond to small increases in firing rate demand without raising air flow. Similarly, air flow may be adjusted slightly downward, if firing rate demand falls, without having to decrease fuel flow.

### *3.2 FEEDWATER CONTROL*

Feedwater control is the regulation of water supplied to the boiler drum. This water is admitted to the steam drum and after absorbing the heat from the furnace, generates steam produced by the boiler.

Proper boiler operation requires that the level of water in the steam drum is maintained within a certain band[12]. A decrease in this level may uncover boiler tubes, allowing them to become over-heated. An increase in this level may interfere with the operation of the internal devices in the drum that separate the moisture from the steam.

The water level in the steam drum is related to, but not a direct indicator of, the quantity of water in the drum. At each boiler load, there is a different volume in the water that is occupied by steam bubbles. Thus, as load is increased, there are more steam bubbles and this

causes the water to swell or rise rather than fall because of the added water usage (Figure 3.10). Therefore, if the drum volume is kept constant, the corresponding mass of water is minimum at high boiler loads and maximum at low boiler loads. The control of feedwater therefore needs to respond to load changes to maintain water by constantly adjusting the mass of water stored in the system.

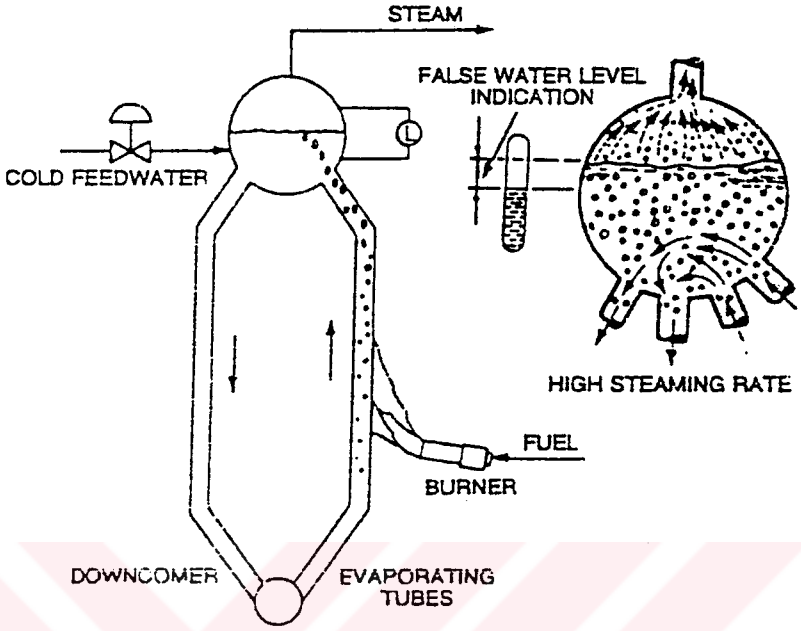


**Figure 3.10 Shrink and Swell Effect on Evaporating Tubes**

Feedwater is always colder than the saturated water in the drum. Some steam is then necessarily condensed when contacted by the feedwater. As a consequence, a sudden increase in feedwater flow tends to collapse some bubbles in the drum and temporarily reduces their formation in the evaporating tubes. Then, although the mass of liquid level in the system has increased, the apparent liquid level in the drum falls. The equilibrium is restored within seconds and the level begins to rise. Nonetheless, the *initial* reaction to a change in feedwater flow tends to be in the wrong direction. This property, called *inverse response,* causes an effective delay in control action, making the control more difficult. Liquid level in a vessel lacking these thermal characteristics can typically be controlled with a proportional band of 10% or less. By contrast, the drum level controller needs more proportional band in the neighborhood of 100% to maintain stability. Integral action is then necessary, whereas it can usually be avoided when very narrow proportional band settings can be used.

Control of feedwater supply based on total drum level alone tends to be self-defeating, since on a load increase it tends to decrease water feed when it should be increasing. Figure 3.11 shows the response relationship among steam flow, water flow and drum level that should be present in a properly designed system, if constant level under variable load is

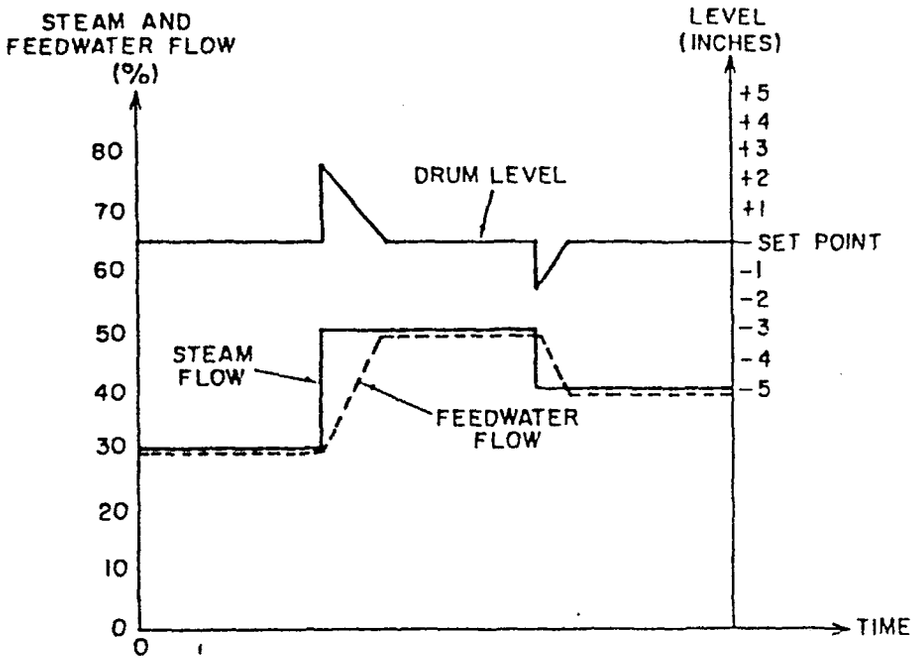


**Figure 3.11 Response Relationship among Load, Feedwater Flow and Drum Level in A Properly Designed System**

### 3.2.1 Single and Two - Element Control Systems

For small boilers having relatively high storage volumes and slow-changing loads, a simple proportional control may be sufficient, imprecise as it is. Integral action should not be used because of resulting unstability that is a result of integration of the swell on load changes that must be removed later. Control of this type therefore involves the supply of feedwater on straight proportional level control.

For larger boilers and particularly when there is a consistent relationship between valve position and flow, a two-element control system shown in Figure 3.12 can do an adequate job under most operating conditions[7].

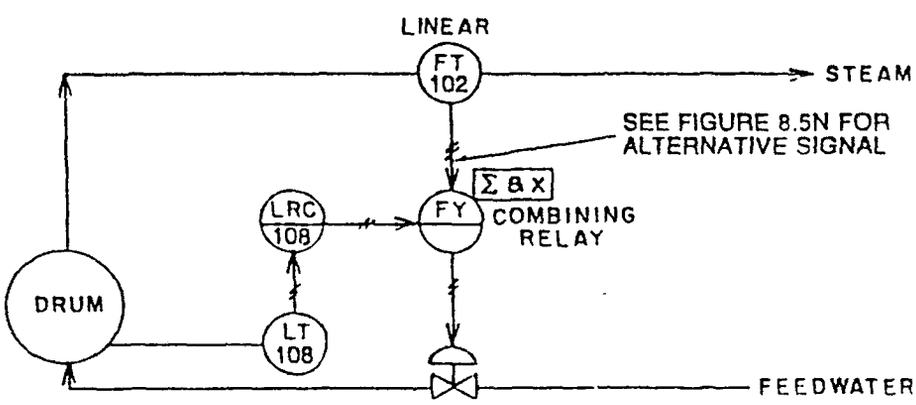


**Figure 3.12 Two-element Feedwater Control System**

Two-element control is primarily used on intermediate-size boilers, in which volumes and capacities of the steam and water system would make the simple total level control inadequate because of swell.

Total level control is undesirable when it is detected by sensors such as the conductivity type that is insensitive to density variations. Displacement and d/p cell type sensors are preferred from this perspective, because they respond to hydrostatic head. Smaller boilers, in which load changes may be rapid, frequent or of large magnitude, will also require the two-element control system. Additionally, field testing, characterization and adjustment of the feedwater supply control valve are required so that the relationship of control signal to the valve flow matches that of the steam flow to the flow transmitter output. Any deviations in this matching will cause a permanent level offset at the particular capacity and less than optimal control (Figure 3.13). The level controller output step will match the change in the steam flow transmitter signal.

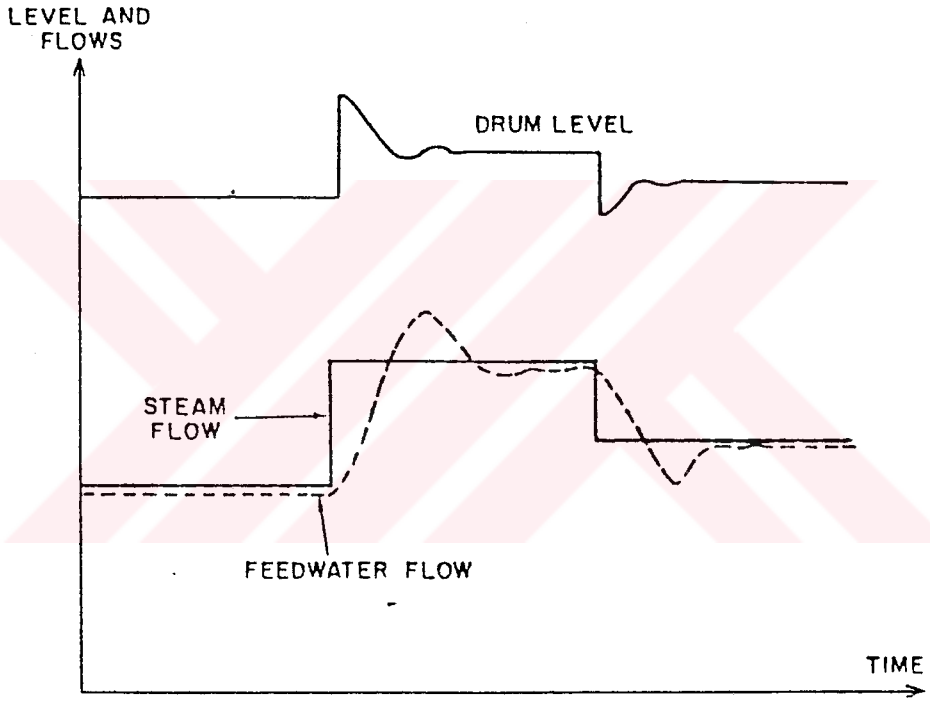


**Figure 3.13 The Effect of Mismatching between Steam Flow Transmitter and Valve Flow Characteristics**

### 3.2.2 Three - Element Control System

As boilers become greater in capacity, economic considerations make it highly desirable to reduce drum sizes and increase velocities in the water and steam systems. Under these conditions, the boiler is less able to act as an integrator to absorb the results of incorrect or insufficient control. A three-element control system is used on such large boilers.

Three-element control is similar to the two-element system, except that the water flow loop is closed rather than open. There are several ways of connecting a three-element

feedwater system, each of which can produce the results shown in Figure 3.11. Figure 3.14 illustrates various ways of connecting this system.

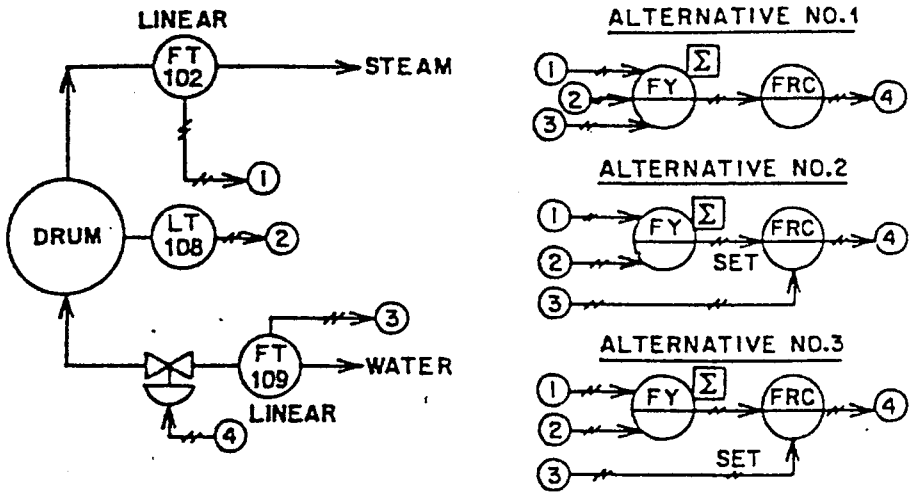


**Figure 3.14 Three-element Feedwater Control System**

In making gain adjustments on a three-element control system, the first step is to determine the relative gains between level and flow loops. By observing a change in the boiler load, the particular boiler swell characteristics can be noted. Maximum system stability results when the negative effect of swell equals the positive effect of flow. For example; If a 20% of maximum flow change produces a 2.4 PSI (0.16 bar) change in flow transmitter output and this flow change also produces a 3 in.(75mm) swell on a 30 in. (750mm) range transmitter or a 1.2 PSI (0.08 bar) transmitter output change, then the gain of the level loop should be double the gain on the flow loop[7].

### 3.2.3 Feedforward Control of Drum Level

A feedforward variation is recommended to maintain a steam-water balance, reducing the influence of shrink-swell and inverse-response phenomena. Therefore, steam flow is used as a disturbance compensation signal. The system shown in Figure 3.15 causes the feedwater flow to match steam flow in absence of action by the level controller. The two flowmeters have identical ranges and their signals are subtracted. If the two flowrates are identical, the subtractor, send a 50% signal to the flow difference controller. An increase in steam flow will call for an equal increase in feedwater flow to return the difference signal to 50%.

Errors in the flowmeters and the withdrawal of perhaps 2.5% water as blowdown, which is not converted to steam, will prevent the two flow signals from being identical[5]. Any error in the steam-flow balance will cause a falling or rising level. Therefore, the level controller must adjust the setpoint of the flow-difference controller to strike a steady-state balance.

Figure 3.15 also shows external feedback from the flow difference measurement applied to the level controller. This will precondition the level controller during start-up or at other times when feedwater is controlled manually. Otherwise, an increase in steam or blowdown

flow will increase the feedwater flow immediately, without depending on the level controller, this means that the feedback portion of the drum level loop will need only to trim the ΔFIC-109 setpoint to correct flowmeter errors. Because the role of the feedback portion is reduced from manipulating feedwater flow across its entire range to adjusting only for flowmeter errors, deviations in level from the setpoint will be minimized. Controller mode settings are not so critical in this situation, and incorrect actions caused by shrink, swell and inverse-response are reduced.

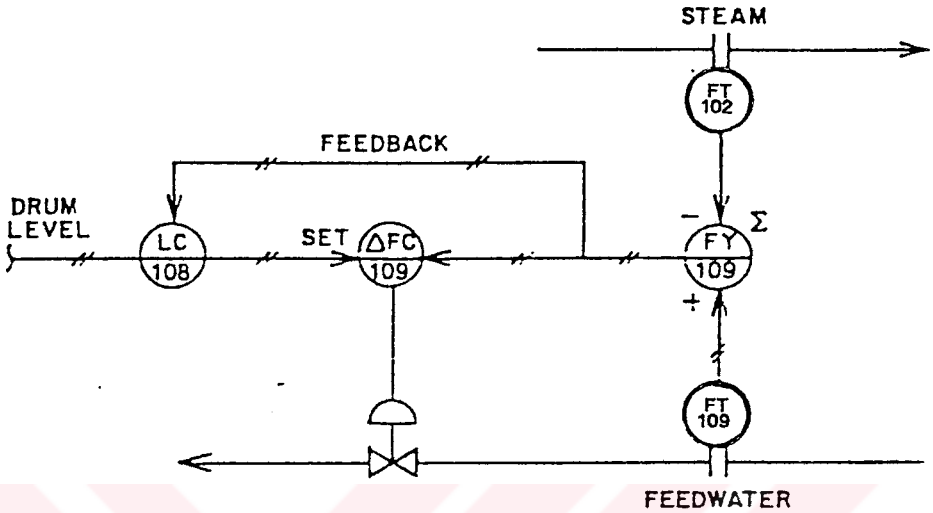


**Figure 3.15 Feedforward Control of Drum Level**

### 3.2.4 Valve Sizing

Linear or linearized flow signals are required for calculation flexibility. To keep the controller gain independent of load variations, the feedwater valve also should have linear characteristics. The simplest way to ensure this by using a characterizing positioner on the control valve. It may also be required to dampen the control valve, to make it less susceptible to noisy control signals.

For control valve sizing a system head curve showing the relationship between system pressure and capacities should be developed[3]. A typical head curve is shown in Figure 3.16. The head curve demonstrates a basic problem in selecting the flow rate and pressure drop when the feedwater control valve is sized. Capacity $C_2$ and X are the most desirable from a control standpoint. Capacity $C_3$ and Y or Z are often used in an attempt to satisfy a boiler code requirement. The code requires that sufficient water be furnished to the drum with safety valves blowing.

This code requirement is interpreted by some as full capacity of boiler plus safety valve capacity eventhough maximum firing rate could not hold the pressure. Safety valves will not blow unless the firing rate is higher than capacity. The code does not require all the capacity to be provided in the feedwater control valve; therefore there is no need to deprave the control quality by furnishing an oversized valve.

It is not uncommon to see a valve that was designed for more than required capacity. The duty required of a feedwater control valve is quite heavy because of the large energy dissipation as the water passes through the valve. Very pure water as normally used in boilers tends to be metal-hungry. This, combined with water velocity, produces a corrosion (or cavitation) effect that calls for a chrome-molly steel valve body when velocities are in excess of 3 m/s.

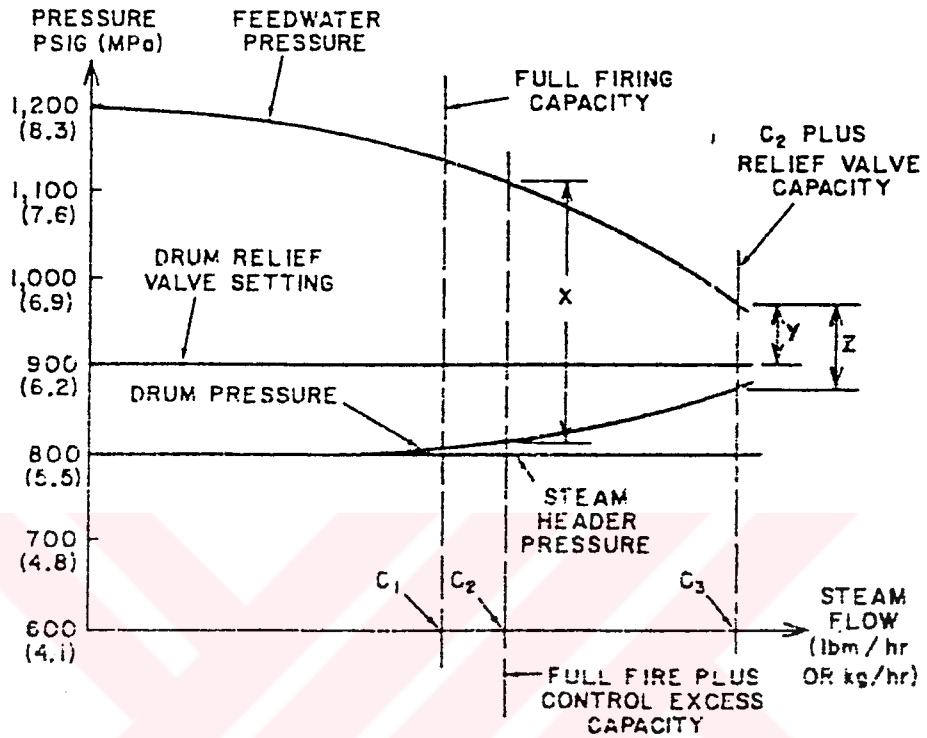


**Figure 3.16 Head Curve for Feedwater Valve Sizing**

### 3.2.5 Pump Speed Control

Control of pump speed to regulate feedwater flow can be accomplished if the pump is driven by a steam turbine or is furnished with variable-speed electric drive. This can be used in place of a control valve to save pump power on single boiler systems[5]. In systems in which several boilers are operating in parallel, the speed control can be used to save pump power by controlling discharge pressure at a constant differential pressure above boiler pressure. When pump speed is being used in place of a feedwater valve on a single boiler system, a large part of the speed control range is used in developing pump head at low flow. Characterization of the signal is thus necessary for good operation and constant gain throughout the operating range. This is demonstrated in Figure 3.17, which shows the pump characteristic. The control ranges used for zero load and from zero to full load can be noted in this figure. However, since the feedwater control valve is assumed to be used in overall control diagram shown in Figure 3.1, further discussion of variable-speed pumping is not covered by this thesis.

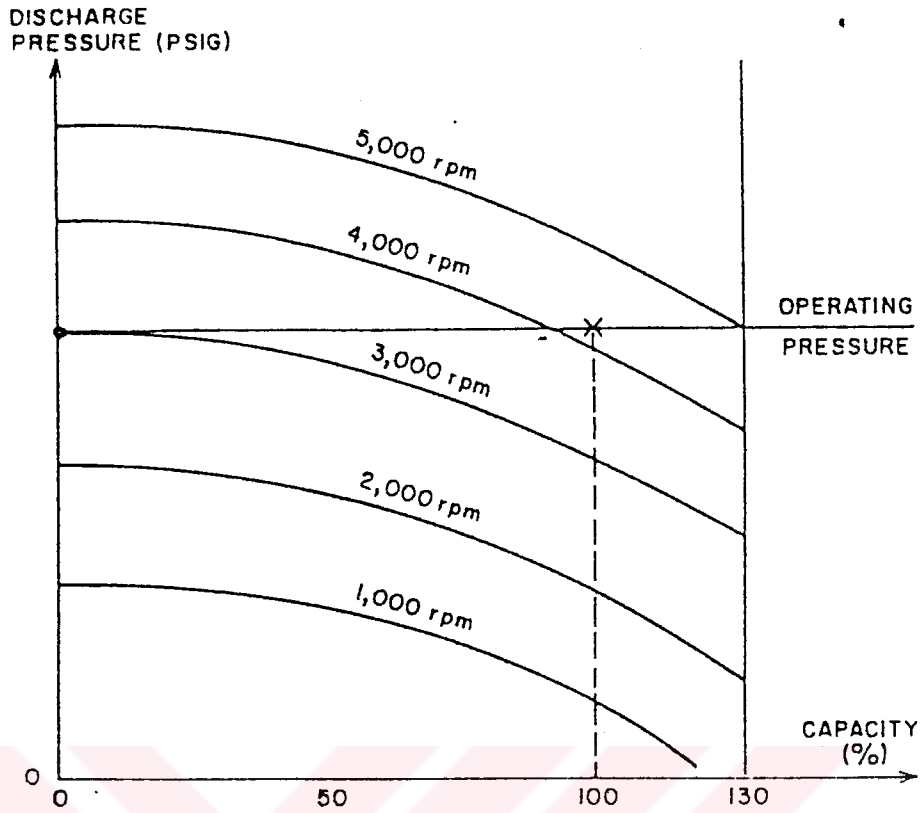


**Figure 3.17 Feedwater Pump on Speed Control**

### *3.3 STEAM TEMPERATURE CONTROL*

The purpose of steam temperature control is to improve the thermal efficiency of steam turbines as well as boiler service life. Its most common application is for steam turbine electric power generation. The factors effecting steam temperature in a convection-type superheater are superheater area, flue gas flow pattern across the superheater, flue gas mass flow, temperature of flue gases leaving the furnace, and steam flow through the superheater. Additionally, furnace temperature affects a radiant superheater. Some superheaters may be designed for a flat curve combining radiant and convection surface, but most superheaters are the convection type. Control-station steam temperatures are limited to 566 °C, where as those in industrial units may be considerably less[1]. If these temperatures can be controlled with extreme precision, they can be pushed closer to the allowable limits. Temperature can be controlled by adjustment of the amount of recirculation of the flue gas or by attemperation, which is method of superheat removal through feedwater spraying.

with extreme precision, they can be pushed closer to the allowable limits. Temperature can be controlled by adjustment of the amount of recirculation of the flue gas or by attemperation, which is method of superheat removal through feedwater spraying.

The required positions of burners or recirculating and by pass dampers as a function of load are well-established for any given boiler design. Therefore, it is common practice to program their positions directly from load. Readjustment to correct for inaccuracies in the program and changes in the characteristics of boiler, is accomplished by feedback control of temperature, using proportional and integral action (Figure 3.18). Being applied through a multiplier, the feedback loop gain varies directly with load, and this tends to cancel the inversely varying process gain.

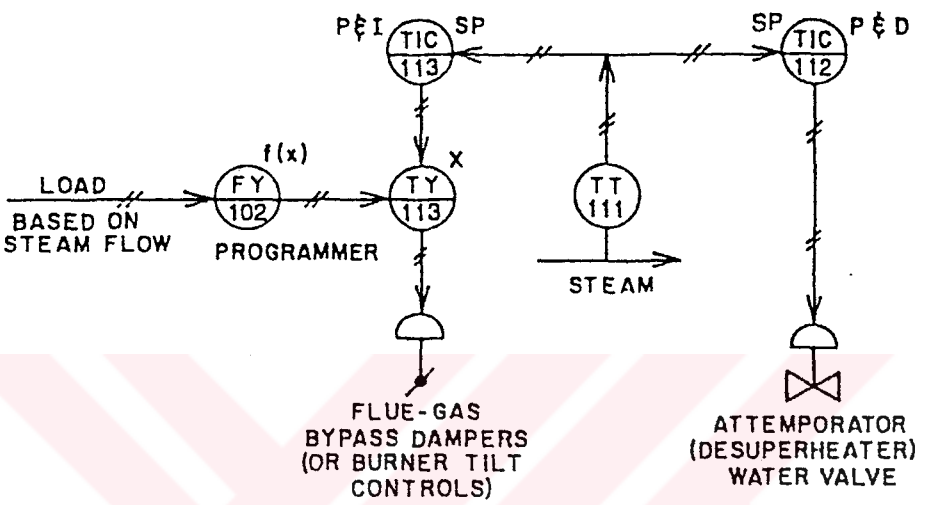


**Figure 3.18 Steam Temperature Control**

### 3.3.1 Desuperheater Spray Controls

Temperature control by water spraying is more responsive and can be used to supplement flue-gas manipulation. To minimize water usage, however, and to avoid conflict with flue-gas manipulation, proportional plus derivative control should be used for water spraying. The controller may be biased to deliver a nominal amount of feedwater at zero temperature deviation. The control system is described in Figure 3.18.

To use a desuperheater spray for steam temperature control, the boiler would normally be provided with added superheater area. Figure 3.19 demonstrates the effect of the water spray, which is usually between a primary and a secondary superheater section, for temperature control. Provision must be made to prevent from *reset windup* when in the uncontrolled load change[9]. Loop diagram of this system is shown in Figure 3.20. Large boilers may have burners that tilt up and down approximately 30 degrees for steam temperature control this effectively changes the furnace heat transfer area, resulting in temperature changes of flue gases leaving the boiler. Spray is frequently used with these systems as an override control. These systems normally require the type of controls illustrated in Figure 3.18.

Flame temperature does not vary much with load, but the hottest gases tend to propagate further at higher loads. To increase steam temperatures at low loads, recirculation blowers or tilting burners are used, which will direct the heat at the superheater sections. At high loads, the rise in steam temperature is avoided by opening up some of the flue-gas by-pass dampers or by desuperheating the steam through spraying water. For each boiler, the relationship between load and the required damper, recirculation fan or burner tilt position can be pre-programmed. The overall control diagram in Figure 3.1 shows the input signal to the programmer as coming from FT-102 vortex shedding steam flow transmitter. The pre-programmed relationship does need to be adjusted to overcome inaccuracies and changes in boiler characteristics.

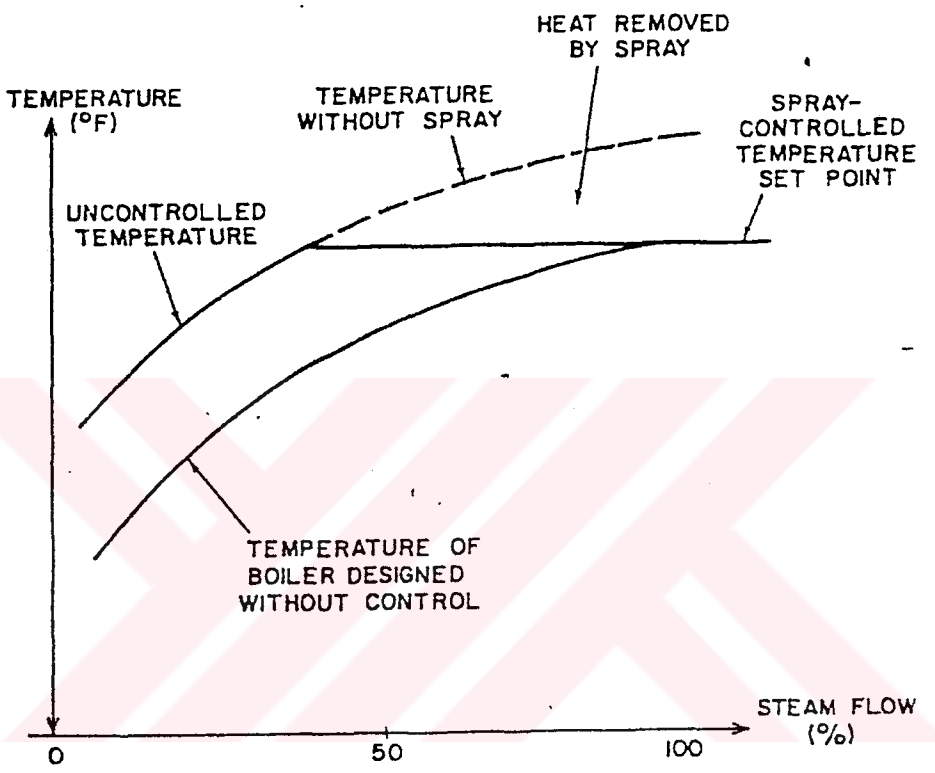


**Figure 3.19 Desuperheater Characteristics**

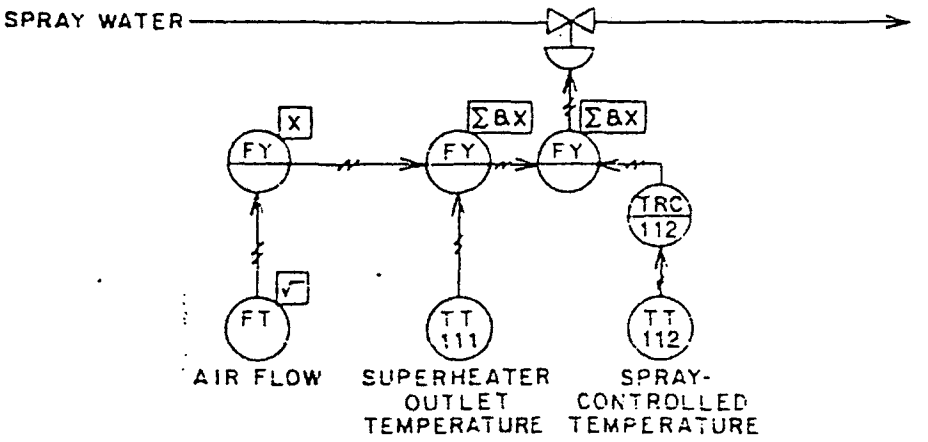


**Figure 3.20 Desuperheater Spray Control System**

TIC-111 throttles the setpoints of both slave controllers in cascade. Reset wind-up in TIC-111 is prevented by the external feedback (FB). Without it, wind-up would occur at low loads, when high temperatures cannot be maintained. The task of the temperature control is split between two slaves. The slower of these slaves-the PI controller-modulates the burner or damper position for long-term control. The desuperheater controller is faster; actually, it is faster than its cascade master. In order to use that speed, to minimize water usage (an irreversible waste of work), and to avoid conflicting with PI controller, only P & D control algorithm is used.

The desuperheater control loop can also be configured as a cascade loop, as illustrated in Figure 3.21. Here, the saturated steam from the steam drum is returned back into the furnace where it is superheated. If the amount of superheat is excessive, water is sprayed into the steam and it is returned once more to the furnace to make sure that all water is vaporized. The slave temperature controller (TIC-112) is placed right after the spray injector, while the cascade master (TIC-111) is located at the steam outlet. In Figure 3.21, the feedforward correction is based on steam flow (FT-102), and the relationship between load and uncontrolled temperature (see Figure 3.19) is predicted by the FY-102 function relay.

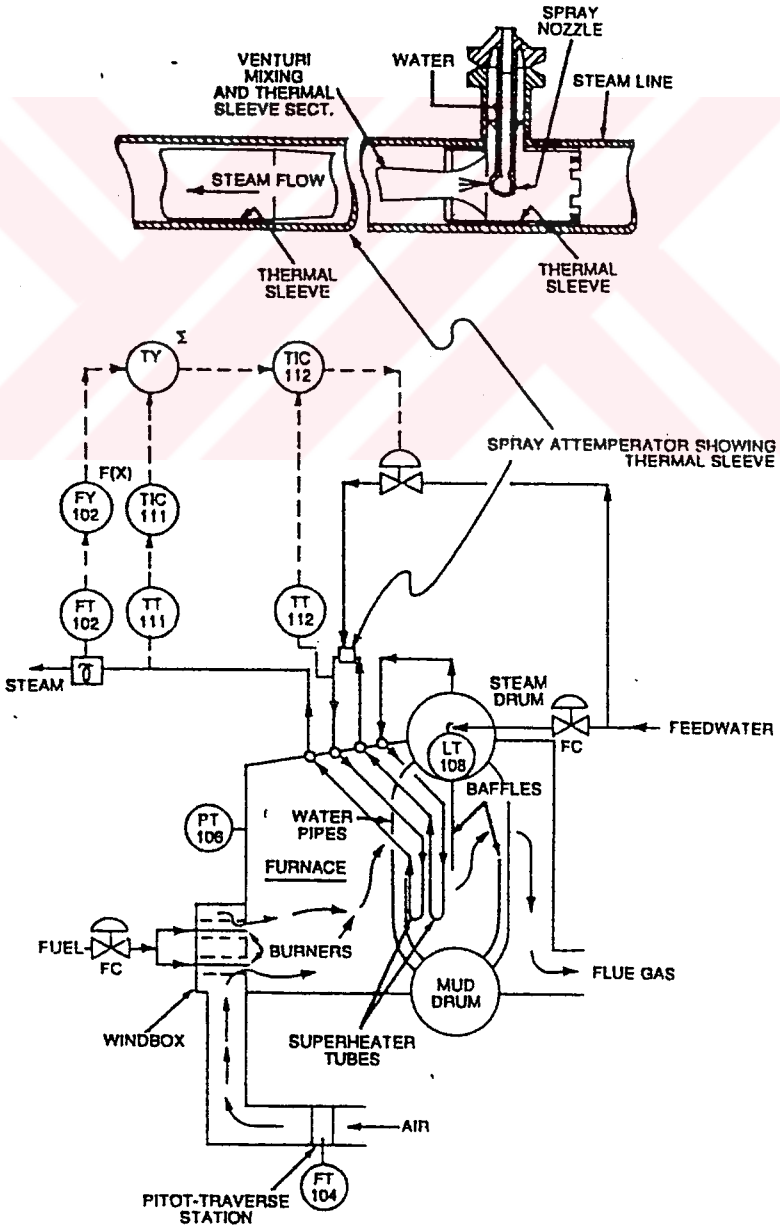


**Figure 3.21 Cascade Configuration for Controlling the Desuperheater Control Valve**

### 3.3.2 Cooling by Excess Air

Since mass flow of flue gas affects the steam temperature, variation in excess combustion air can be used to regulate the steam temperature. This method may be used on a boiler that was not specifically designed for temperature control, although increasing excess air flow increases boiler stack heat losses, turbine thermal efficiency will also increase and maintaining steam temperature can provide the greater economic benefit[8].

### 3.3.3 Flue Gas Temperature Effect

Flue gas temperature is important for two reasons; first, as an indication of boiler efficiency and second, because if it drops below the point, the condensate formed will dissolve the oxides of sulfur in the flue gas and the resulting acid will cause corrosion.

Combined control diagram in Figure 3.1 shows the temperature control loop TIC-110. The purpose of TIC-110 is to keep the flue gas dry and above its dew point. The flue gas temperature at the cold end of stack is usually arrived at as the average of several sensor outputs measuring the temperature at various points in the same plane. When this averaged temperature drops near the dew point, TIC-110 will start increasing the set point of air preheater (TIC-114). Through the use of steam in the combustion air, the inlet air temperature to the boiler is increased, which in turn raises the flue gas temperature.

## *3.4 INTEGRATION OF LOOPS*

Loops and sub-systems can be combined to create an integrated control system as shown in Figure 3.1. Other combinations of the sub-systems can similarly be put together to form a coordinated control system. However, the chief points that should be considered are[3];

1. The systems often interact; e.g., air flow affects steam temperature, feedwater flow affects steam pressure, and fuel flow affects drum level and furnace draft.

2. For flexibility and rangeability, linear flow signals are necessary as well as control valves having linearizing positioners.

3. Fuels should be totalized on an air-required basis.

4. The flows of fuel and air should be controlled such that the flow rates reaching the burners always represent a safe combination.

# CHAPTER FOUR

# BOILER OPTIMIZATION

## *4. WHY OPTIMIZATION?*

When the fuel cost of a boiler is considered, even a few percentage points of improved efficiency can justify the cots of added instruments and controls. In this chapter, a number of optimization techniques will be discussed. The various goals of optimization include;

1. Minimize excess air and flue-gas temperature.

2. Minimize steam pressure.
   a. Turbines thereby open up turbine governors.
   b. Reduce feed pump discharge pressure.
   c. Reduce heat loss through pipe walls.

3. Minimize blowdown.

4. Measure efficiency and know when to perform maintenance.

5. Provide accountability.
   a. Monitor losses.
   b. Recover condensate heat.

The first three methods of optimization are achieved by advanced automatic process control and can be superimposed upon the overall boiler control system shown in Figure 3.1. The tie-in points for these optimization strategies are also shown in that figure. The benefits of the last two methods (efficiency and accountability) are not obtained in the from of automatic control signals, but they contribute to better maintenance and better understanding of heat losses and equipment potentials.

## *4.1 EXCESS AIR OPTIMIZATION*

If a boiler is operating on a particular fuel at a specific load, it is possible to plot the various boiler losses as a function of air excess or efficiency, as shown in Figure 4.1. The sum total of all the losses is a curve with a minimum point. Any process that has an operating curve of this type is an ideal candidate for instrumental optimization. Such process

control systems operate by continuously determining the minimum loss point of the system at that particular load and then shifting the operating conditions until that points is reached.

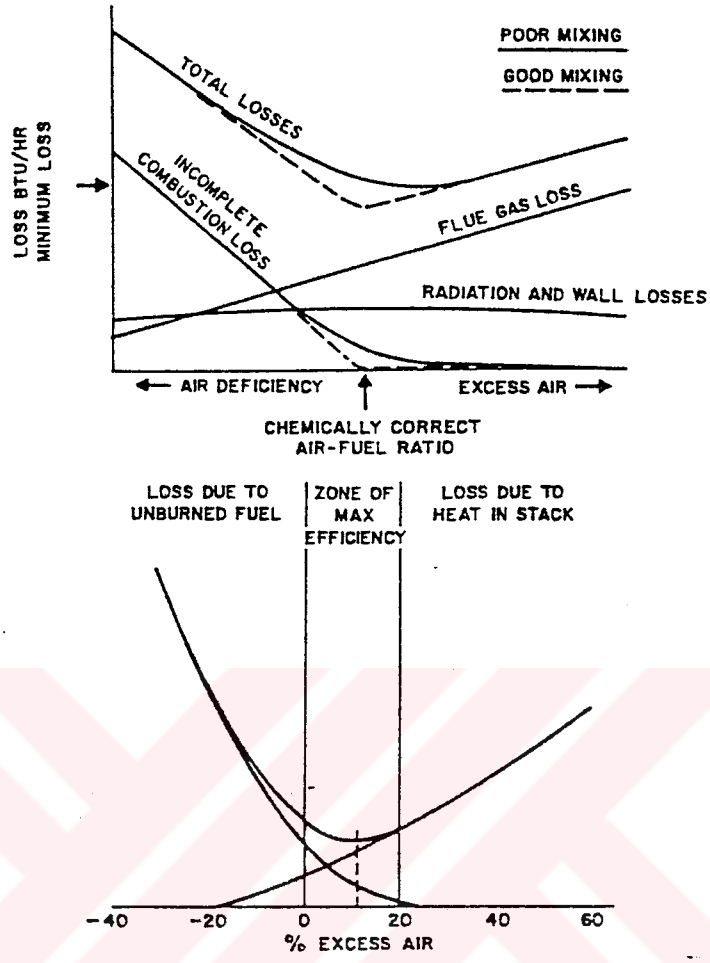


**Figure 4.1 Boiler Losses as A Function of Excess Air (Top)**
**The Most Efficient Boiler Operation (Bottom)**

As shown in Figure 4.1, the radiation and wall losses are relatively constant. The most heat losses in a boiler occur through the stack. Under air-deficient operations, unburned fuel leaves and when there is an air excess, heat is lost as the unused oxygen and its accompanying nitrogen is heated up and then discharged into the atmosphere. The purpose of optimization is to keep the total losses at a minimum. This is accomplished by minimizing excess air and by minimizing the stack temperature[5] (see Figure 4.2.).

The minimum loss point in Figure 4.1 is not where excess oxygen is zero. This is because no burner is capable of providing perfect mixing. Therefore, if only as much oxygen would be admitted into the furnace as is required to convert each carbon molecule into $CO_2$, some of the fuel would leave unburned, as not all $O_2$ molecules would find their corresponding carbon molecules. This is why the theoretical minimum loss point shown by the dotted line in

Figure 4.1 is to the left of the actual one. This actual minimum loss or maximum efficiency points is found by lowering the excess oxygen as far as possible until CO readings indicate that the minimum has been reached. At this minimum loss point, the flue-gas losses balance the unburned fuel losses.

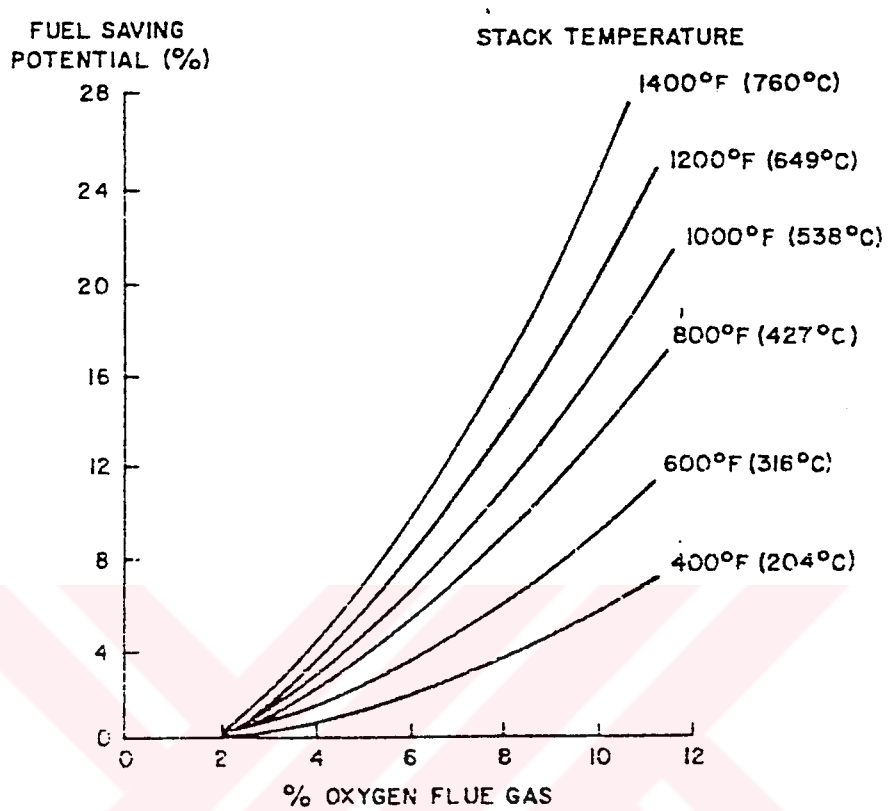


**Figure 4.2 Fuel Saving Potentials in A Boiler with Optimum Conditions**

Assuming that for a particular boiler design using a particular fuel at normal loading, the optimum flue gas temperature is 216 °C with 2% oxygen[6]. The potential fuel saving through optimization can be estimated by determining the fuel loss using Figure 4.2, where the present unoptimized stack gas conditions are entered.

### 4.1.1 Flue-Gas Composition

Figure 4.3 shows the composition of the flue-gas as a function of the amount of air present. The combustion process is usually operated so that enough air is provided to convert all the fuel into $CO_2$, but not much more. This percentage of excess oxygen is not a constant. It varies with boiler design, burner characteristics, fuel type, air infiltration rates, ambient conditions and load.

Figure 4.4 shows that the percentage of excess air must be increased, as the load drops off. This is because, at low loads the burner velocities drop off and the air flow is reduced, while

the furnace volume remains constant. This reduces turbulence and lowers the efficiency of mixing between the fuel and air. This loss of mixing efficiency is compensated for by the higher percentage of excess oxygen admitted at low loads.

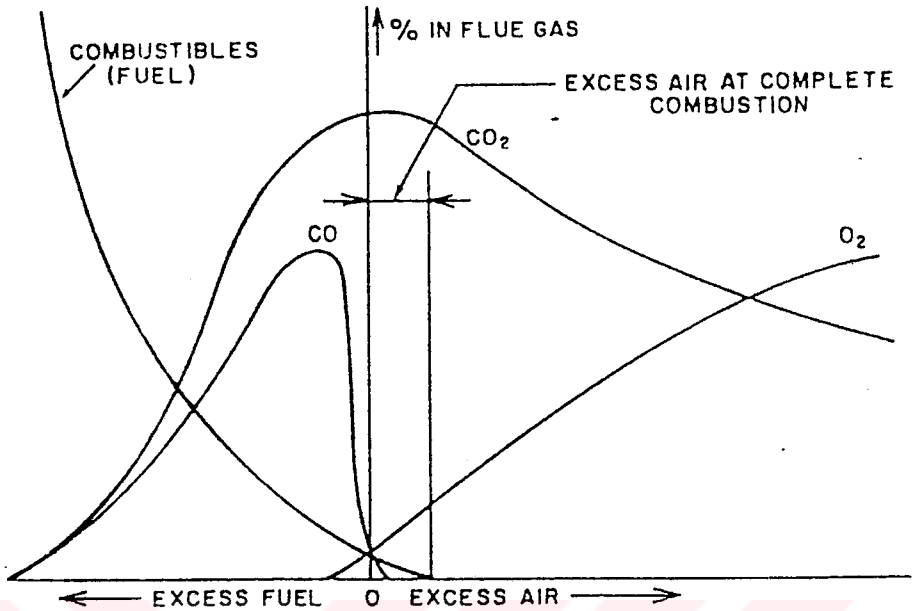


**Figure 4.3 The Composition of The Flue Gas**

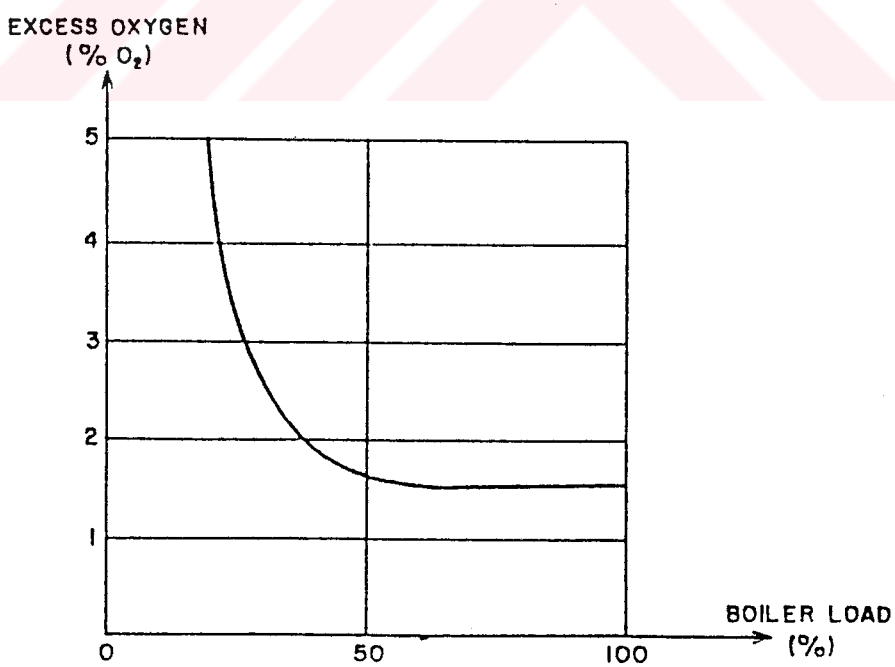


**Figure 4.4 Theoretical Relationship between Load and Oxygen**

### 4.1.2 The Effect of The Fuel Used

In a boiler furnace, the heat energy evolved from the union of the combustible elements with oxygen depends on the ultimate products of combustion. Because of the weight ratios of oxygen and nitrogen in air (0.2315 and 0.7685 respectively), to supply 0.45 kg of oxygen for combustion, it is necessary to supply 1.96 kg of air[1]. In this amount of air, there will be 1.5 kg of nitrogen, which does not enter directly into the combustion process, but which nevertheless remains present.

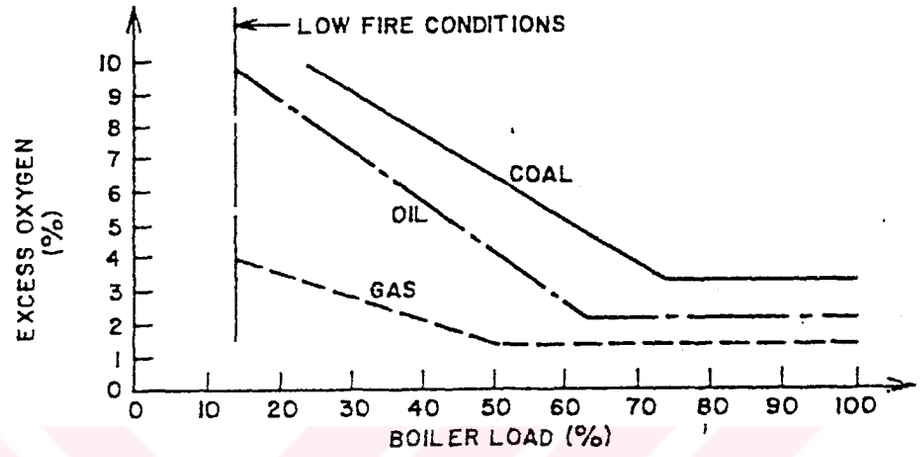


**Figure 4.5 Excess Oxygen vs. Boiler Load**

If theoretical or total air is defined as the amount required, then the excess air is the percentage over that quantity. Figure 4.5 illustrates that the gasses require the lowest and solid fuels the highest percentage of excess oxygen for complete combustion. The curves in Figure 4.5 also illustrate that as the load drops off, the percentage of excess oxygen needs to be increased.

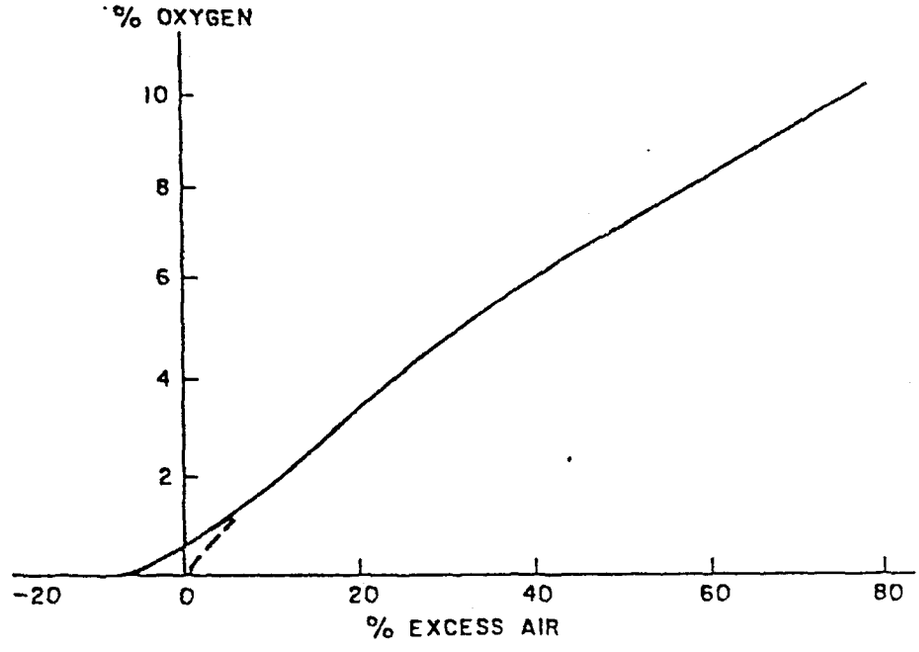


**Figure 4.6 Excess Oxygen and Excess Air Correction**

Figure 4.6 illustrates the relationship between excess air and excess oxygen for a particular fuel. The optimum excess oxygen percentages for gas, air and coal are around 1%, 2% and 3% respectively[3].

### 4.1.3 Air - Fuel Ratio with Excess Oxygen Trim

In Figure 3.1, the set point of the air-fuel ratio relay is designated as the #1 tie-in point for the optimizer controls. This was done to emphasize the importance of this setting and to show that the method used to determine the correct air-fuel ratio will determine if the boiler is optimized or not.

Figure 4.7 shows automatic air-fuel ratio correction based on load and excess air indicated by percent oxygen. In this control system, FY-102 provides the relationship between the load and the corresponding excess oxygen setpoint for optimum performance. Thus, FY-102 memorizes the characteristic curve of the boiler for the fuel being used (see Figure 4.4 and figure 4.5) and generates the excess oxygen setpoint based on that curve.

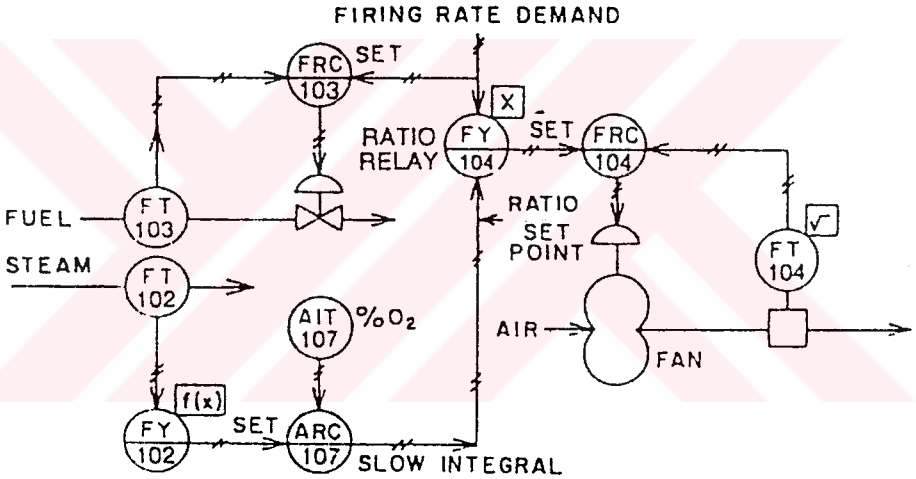


FT-103: LINEAR MASS FLOWMETER
FT-102:LINEAR VORTEX SHEDDING TRANSMITTER
FT-104: AREA AVERAGING PITOT STATION

**Figure 4.7 Air-Fuel Ratio Control with Excess Oxygen Trim**

Figure 4.8 illustrates an automatic control system corrected by oxygen analysis and provided with safety limits to protect against air deficiency. For the dual selector system to function, air and fuel flows must be scaled on the same heat-equivalent basis. The dual selector system forces air flow to lead fuel on an increasing load and to lag on a decreasing load. Then flue-gas oxygen content tends to deviate above the set point on all load changes. If the oxygen controller were allowed to react proportionally to these deviations, it would tend to defeat the security provided by the selectors. Consequently, the integral control mode alone is used on the oxygen signal so that reaction to rapid fluctuations is minimized. The principal function of the controller is to correct long-term. deviations caused by flowmeter errors and variations in fuel quality.

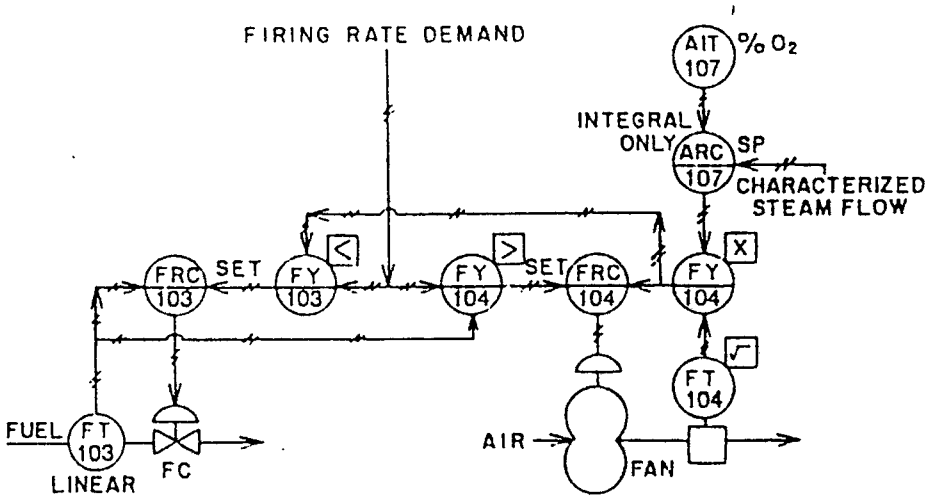


**Figure 4.8 Feedforward Control System that Automatically Maintains Excess Air during Upsets**

This system can be improved as shown in Figure 4.9. Here, FY-102 represents the relationship between load and excess oxygen (see Figure 4.5). The input to the FY-102 function block is the steam flow and the output is the set point of the excess oxygen controller AIC-107. The summer (HY) provides a bias for the operator, so he can shift the characterizer curve up or down to compensate for changes in air infiltration rates or in boiler equipment performance. The oxygen controller compares the measured flue-gas oxygen concentration to the load programmed setpoint and applies PI action to correct the offset. Anti reset wind-up and adjustable output limiting are usually provided as well. The oxygen controller is direct-acting; the air-fuel ratio adjustment therefore increases, if oxygen concentration in the stack rises because of effects such as reduced fuel heating value at constant flow. Increasing the air-fuel ratio adjustment factor raises the compensated process variable transmitted to air flow controller, FIC-104 in Figure 3.1.

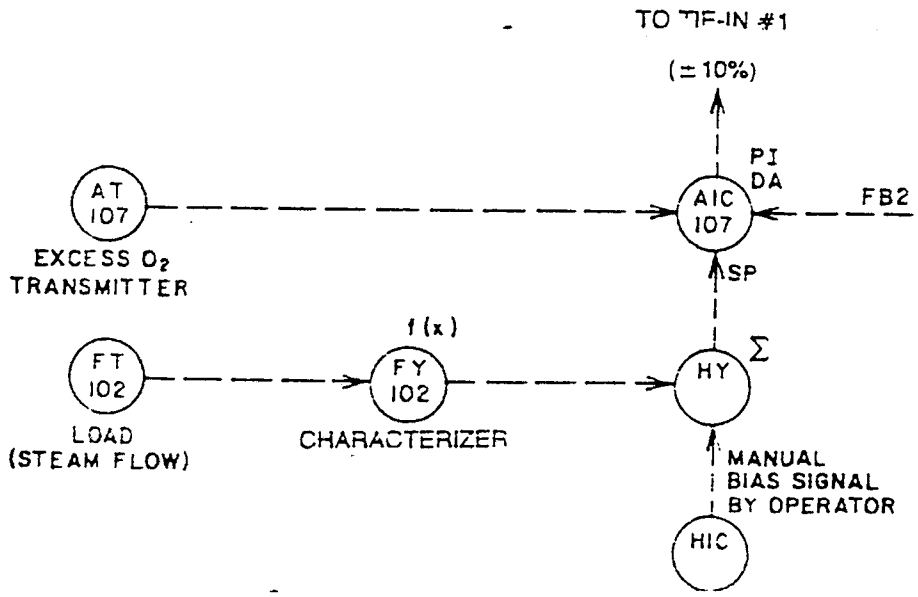


**Figure 4.9 Excess Oxygen Trim Characterization for Load Variations**

## *4.2 STEAM PRESSURE OPTIMIZATION*

In Figure 3.1, the second tie-in point for the optimizer is the set point of the pressure controller PIC-101. In traditional boiler operation, the steam pressure was maintained at a constant value. It is only in recent years that practice has begun to change.

In co-generating plants where the boiler steam is used to generate electricity and the turbine exhaust steam is used as a heat source, optimization is obtained by maximizing the boiler pressure and minimizing the turbine exhaust pressure so as to maximize the amount of electricity generated (see Figure 4.10).

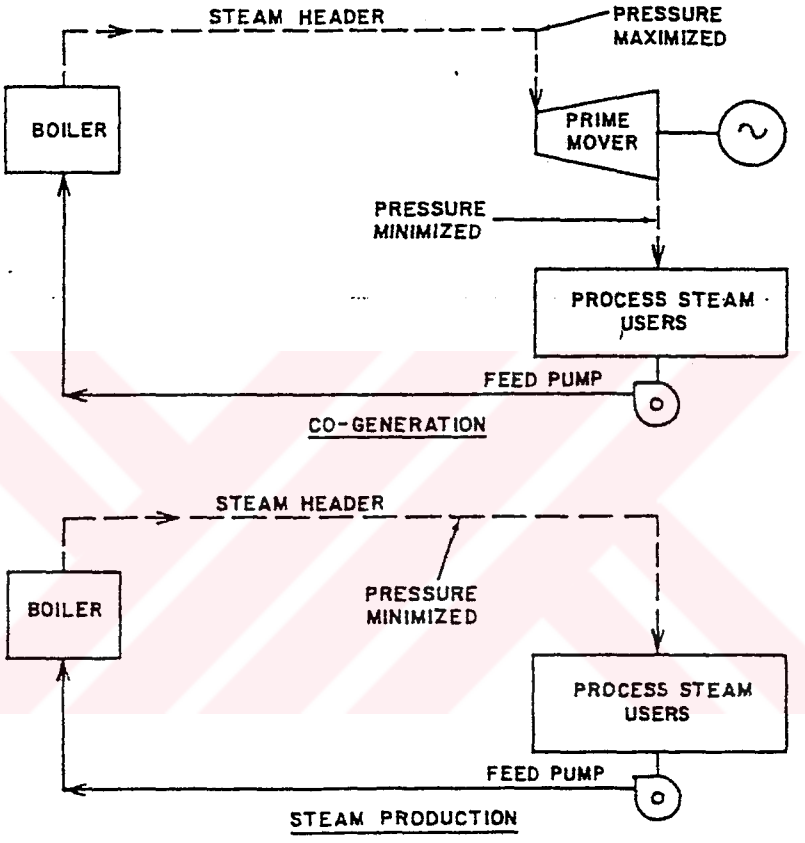


**Figure 4.10 Steam Pressure Optimization Types**

In plants that do not generate their own electricity, optimization is achieved by minimizing the boiler pressure. This reduces the pressure drops in turbine governors by opening them up further, lowers the cost of operating feedwater pumps, because their discharge pressure is reduced and generally lowers radiation and wall losses in the boiler and piping[7].

Pump power is particularly worth saving in high-pressure boilers, since as much as 3% of the gross work produced by a 2400 psig boiler is used to pump feedwater. Figure 4.11 illustrates the method of finding the optimum minimum steam pressure, which then becomes the setpoints for the master controller, PIC-101 in Figure 3.1.

As long as all steam users' valves including all turbine throttle valves are less than fully open, a lowering in the steam pressure will not restrict steam availability, because the user

valves can open further. The high signal selector (ty-1) selects the most open valve and the valve position controller (VPC-2) compares that signal with its set points, for example 80%. Even if the most open valve in the plant is less than 80% open, the pressure controller set point is slowly lowered. VPC-2 is an "integral only" controller; its reset time is at least 10 times that of PIC-101. This slow integral action guarantees that only very slowly sliding of the steam pressure will occur and that noisy valve signal will not upset the system, because VPC-2 responds only to the integrated area under the error curve. The output signal from VPC-2 is limited by PY-4 so that the steam pressure set point cannot be moved outside some preset limits. This necessitates the external feedback to VPC-2 so that when its output is overridden by a limit, its reset will not wind up.

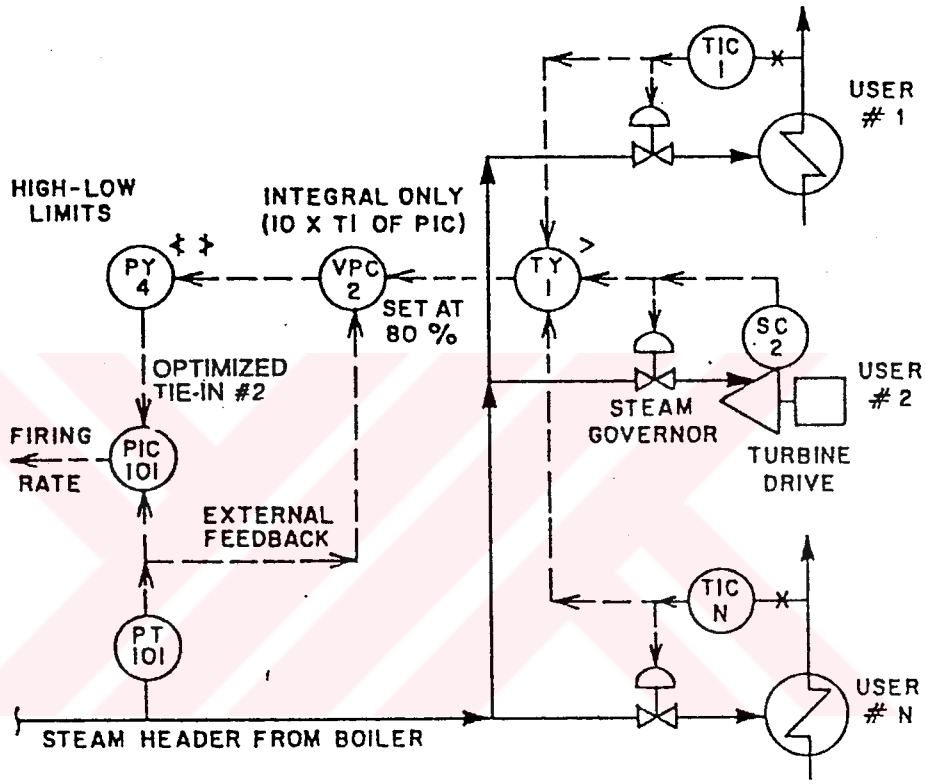


**Figure 4.11 The Optimized Floating of Steam Supply Header**

### *4.3 WATER SIDE OPTIMIZATION*

The optimization of water side of a boiler includes the optimized operation of the boiler blowdown. In Figure 3.1, the third tie-in point for the optimizer is the point of the blowdown flow controller. The goal of the optimization is to minimize blowdown as much as possible without causing excessive sludge or scale buildup on the inside surfaces of the boiler tubes. The benefits of such optimization include the reduction in the need for make up water and treatment chemicals and the reduction in heat loss, as hot water is discharged. About 90% of blowdown should occur continuously, 10% would result from the periodic blowing down of the mud drum and of the headers[1].

Blowdown can be optimized by automatically controlling the chloride and conductivity of the boiler water. The neutralized conductivity setpoint is usually around 2500 μS. Automatic control maintains this setpoints within ±100 μS. The required rate of blowdown is a function of hardness, silica, and total solids of the makeup water and also of the steaming rate and condansate return of the boiler. The amount of blowdown can be determined as follows[3].

$$BD = (S-R) / (C-1) \qquad \text{Equation 4.1}$$

where

BD = Blowdown rate, pounds per hour
R = Rate of return condensate, pounds per hour
S = Steam load, pounds per hour
C = Cycles of concentration based on makeup

The value for cycles concentration is generally determined on the basis of the chloride concentration of the boiler water divided by the chloride concentration of the makeup water. The value is also given by dividing the average blowdown rate into average rate of makeup water, assuming no mineral contamination in any returned condensate.

Figure 4.12 illustrates that the rate of blowdown accelerates as the boiler water conductivity set point is lowered. A reduction of about 20% can result from converting the blowdown controls from manual to automatic.

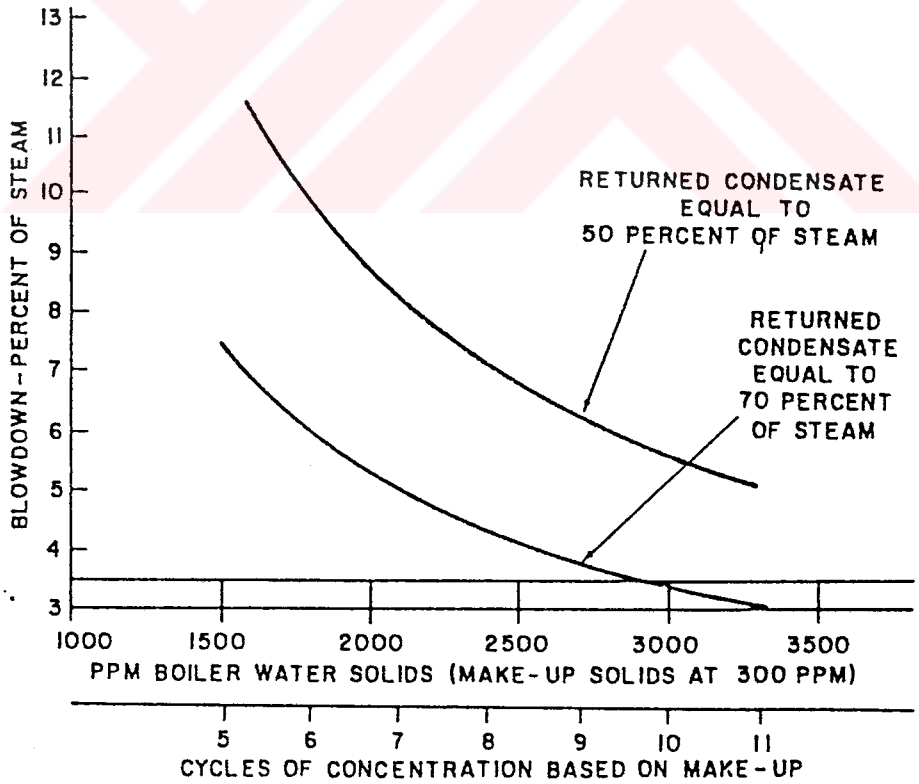


**Figure 4.12 The Rate of Blowdown**

## *4.4 LOAD ALLOCATION*

The purpose of load allocation between several boilers is to distribute the total plant demand in the most efficient and optimized manner. Such optimization will reduce the steam production cost to a minimum. Such computer-based energy management systems can operate either in an advisory or in a closed-loop mode. The closed-loop systems automatically enforce the load allocation without the need for operator involvement. The advisory systems, however, provides instructions to the operate but leaves the implementation up to the operator's judgment.

In simple load allocation systems, only the starting and stopping of the boilers are optimized[8]. When the load is increasing. The most efficient idle boiler is started; when the load is dropping, the least efficient boiler is stopped. In more sophisticated systems, the load distribution between operating boilers is also optimized. In such systems, real-time efficiency of each boiler is calculated and this information is used to calculate the incremental steam cost for the next load change for each boiler.

As this thesis covers the design and implementation of a single boiler control and optimization, load allocation concerning multiple boiler systems will not be discussed in detail here.

# CHAPTER FIVE

# A GENERAL DESIGN FOR AUTOMATIC BOILER CONTROL WITH SINGLE-LOOP CONTROLLERS

## *5. AUTOMATIC BOILER CONTROL USING PROGRAMMABLE SINGLE-LOOP CONTROLLERS*

In analog controllers, there is a one-to-one correspondence between hardware and computation functions, thus the execution of complex control calculations is difficult. On the other hand, with controllers employing microprocessors, various additional control calculations can be performed through software. Thus, in addition to the basic PID algorithm, complicated control algorithms can be performed easily by assembling various software modules chosen according to the requirements.

Programmable controllers can be programmed by either the fill-in-the form method or the step writing method (procedure - oriented language, problem - oriented language in a narrow sense). In the former, module specification items are written into a table to assemble the program, in the latter, the functions to be executed are written as instructions.

The operation of programmable controllers is built up of three functions; input reading, computation, and output of the result. Before execution of the user program, the analog input, digital input, and setting parameters are put into related registers respectively as normalized values. In the user program, the required input signal and parameters are loaded from their respective register into the arithmetic register and after executing the desired computation and control, the computed results are stored in the corresponding data registers. The data stored in the output data registers is automatically converted to analog and digital signals and output from the instrument. The controller repeats the input conversion, computation and output conversion every computing period.

YS170 model programmable single-loop controllers manufactured by **Yokogawa Electric Corp. - Japan**[10] have been engineered to design a packaged automatic boiler control system. YS170 programmable single-loop controller provides advanced control and display functions[10]. A pixel - addressable liquid crystal display is used for control and operator interface. Various panels (operation panels group, tuning panels group, alarm display, trend recording and engineering panels group) can be displayed. All operations such as setpoint change, manual output change, control mode transfer. PID parameters setting and so on can

be performed from the front panel of controller. It has high-speed control period of 50ms and a user program area for up to 400 program sequence steps so that it can realize the most sophisticated advanced controls and a variety of correction computations. It can control independently two loops and an independent current output and self-tuning functions are available for each loop, it can perform peer-to-peer communication and supervisory computer communication. The YS170 controller has independent microprocessors for control operation and display functions as well as independent hard manual operation circuit as backup current output for strict system control of a plant.

Computation and control functions required for control are built into the controller as operating function libraries. Specific control functions are programmed by combining these function blocks from the library. Computation is implemented in five stack arithmetic registers called S registers. The use of stack register operations (HP method or reverse Polish notation) eliminates the need to write expressions in brackets. Input to an S register is performed with LOAD instruction and with FUNCTION instructions used for data computation. FUNCTION contains various computation and control functions. After performing a computation, the result remains in the S register while the input data is lost. To store the computed result in the output register, a STORE instruction is used. Even when a STORE instruction is executed, the contents of S registers does not change.

## *5.1 CONTROL SYSTEM OVERVIEW*

The designed control system consists of four YS170 programmable single-loop controllers engineered to control boiler master pressure/oxygen density, air-fuel ratio, drum level/feedwater and steam temperature including safety interlocks logic. However, burner management system (BMS) is not implemented, since its control philosophy depends on the boiler design and it is normally supplied by the boiler manufacturer.

The control system overview with measuring points is given in Figure 5.1.

The control philosophy of the system is based on the control schemes described in Chapter 3 and Chapter 4 and the control narratives of each loop will be described in the following sections.

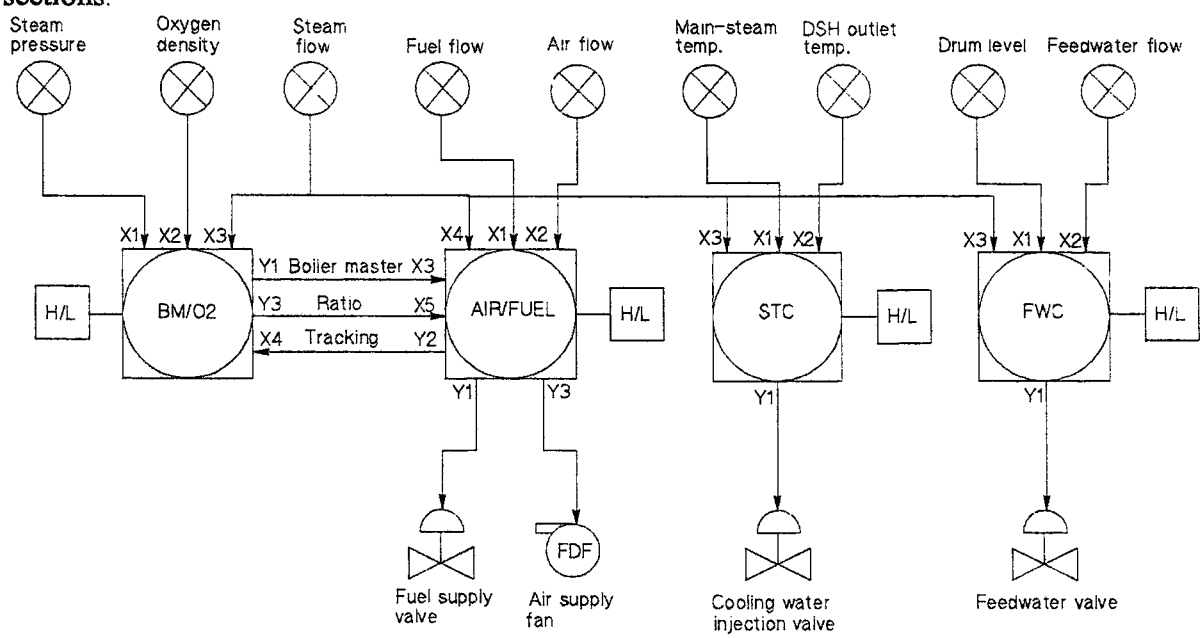


**Figure 5.1 The Designed Control System Overview**

## *5.2 BOILER MASTER PRESSURE AND OXYGEN DENSITY CONTROL*

One YS170 controller is engineered to configure two independent loops for boiler master pressure control and oxygen density control. The functions of this controller are as follows;

1. Maintains main steam on constant pressure.

2. Responds to load changes rapidly.

3. Provides master control output for air-fuel controller.

4. Provides oxygen setpoint depending on load changes.

5. Provides control output for air-fuel controller ratio input.

6. Steam flow is feedforward to steam pressure to improve the response to load changes.

The functional block diagram of BM/$0_2$ controller is given in Figure 5.2. The list of program and input/output signals and internal parameters are given in Appendix-A.

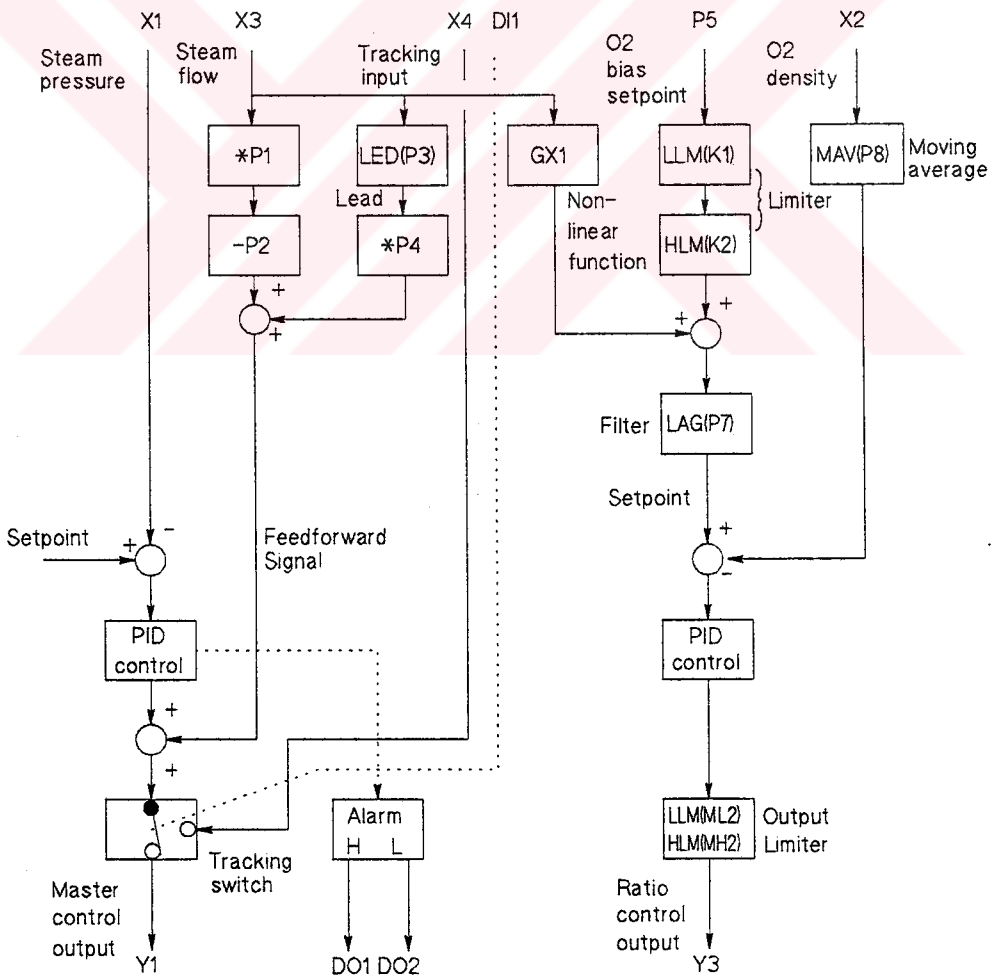


**Figure 5.2 Boiler Master Pressure and Oxygen Density Controller**

### 5.2.1 Feedforward Control and Derivative Action

In order to improve master pressure control, steam flow signal is added to master control signal as a feed-forward signal and fuel flow is adjusted before hand to meet the change in load rapidly.

*1. Feed forward gain (P1)*

Feedforward gain (P1) corresponding to the changes in main steam flow is used to change fuel flow and maintain a constant steam pressure. P1 is calculated according to below equation.

P1 = fuel flow span/main steam flow span (5.1)

*2. Feedforward bias (P2)*

Feedforward bias (P2) is normally set at 50% to obtain a proper PID control output.

*3. Feedforward derivative time constant (P3) and derivative gain (P4).*

Derivative action (first-order lead) is applied to compensate for the time delay before the evaporation quantity begins to change with a change in fuel flow. The derivative time constant (P3) and derivative gain (P4) are set after tuning the overall boiler control system. When P3 = 60 sec. and P4 = 1, the derivative signal changes with changes in main steam flow as shown in Figure 5.3.

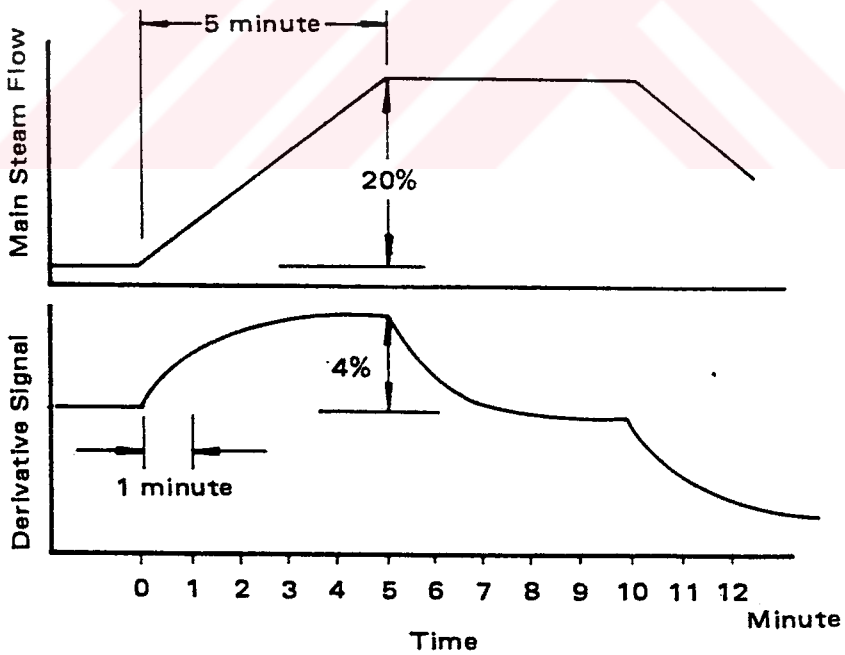


**Figure 5.3 Delay Time Compensation Using Derivative Signal**

### 5.2.2 Oxygen Density Control

Oxygen density signals require rapid response and high reliability. Oxygen density measurement response to air-fuel ratio changes includes time delays in the process sampling unit and analyzer. Oxygen density signal response to changes in the air-fuel ratio can be expressed by combining delay time L (15 to 30 seconds) and first order long T (5 to 10 seconds)[10]. Figure 5.4 shows the relationship between dead time L and boiler load where the first-order lag time (T) is held constant even when the smaller the dead time, the greater the boiler load, and vice versa.

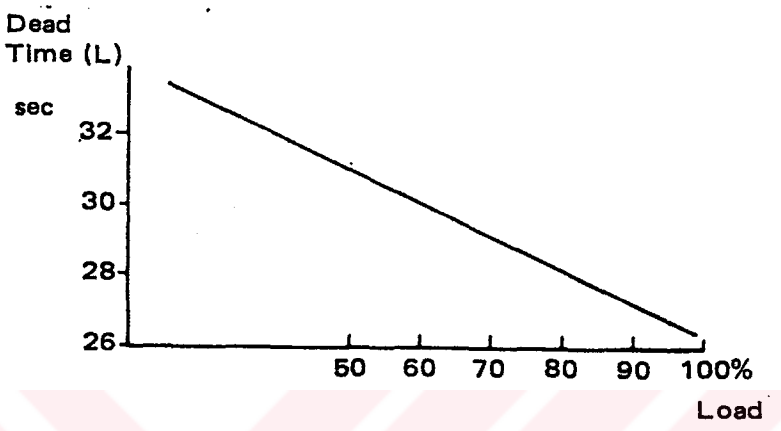


Fire-order lag time constant T = 10 seconds (constant)

**Figure 5.4 Boiler Load vs. Dead Time in Oxygen Density Measurement**

In the oxygen density control loop, oxygen density setpoint is set to its optimum value to meet the load requirements using line-segment characterizer function (GX1). Function is exactly the steam load-oxygen density curve shown in Figure 4.5. Meanwhile, a manual bias setting for oxygen density which cannot be outside the limits is provided for operator.

The oxygen density signal generally fluctuates over a period of 20 to 30 seconds. Therefore, in order to obtain a reliable density value for PID control block process value, these signal fluctuations are averaged using moving average function (MAV) and then PID control block (BSC2) calculate the ratio output for air-fuel controller. This control output is limited by high and low limit values which are determined manually set depending on operation conditions.

### 5.2.3 Output Tracking Function

This function changes the manipulated output from the controller to follow an external signal (tracking input signal). During automatic or cascade mode, if the external status becomes the same as the tracking input signal. The boiler master pressure controller provides remote set point for air-fuel controller. If air-fuel controller is not in cascade mode, air-fuel controller will not take that remote setpoint into account and there will be a difference between remote setpoint calculated by master controller and internal (local)

setpoint of air-fuel controller. This difference causes undesirable fluctuations on air-fuel controller output when its operation mode is transferred to cascade[10]. In order to avoid this abrupt change in manipulated output of air-fuel controller and to keep the process in safety conditions, bumpless mode transfer must be provided. This is obtained by forcing the master controller output to follow the tracking input signal which is the internal setpoint of air-fuel controller. If the air-fuel controller is not in cascade mode, it sends a digital signal to the master controller (DO1 digital output) and this signal is used as tracking switch in master controller (DI1 digital input), then master controller output starts to follow input tracking signal (X4 digital input). As a result, remote set point is adjusted in advance.

### *5.3 AIR-FUEL RATIO CONTROL INCLUDING CROSS-LIMIT CIRCUIT*

Both the master pressure controller and air-fuel controller constitute a automatic combustion control system to keep the boiler pressure constant. Therefore, these two controllers work in cascade where boiler pressure controller is upstream controller (master) and air-fuel controller is downstream controller (slave). The functional block diagram of air-fuel controller is given in Figure 5.5.

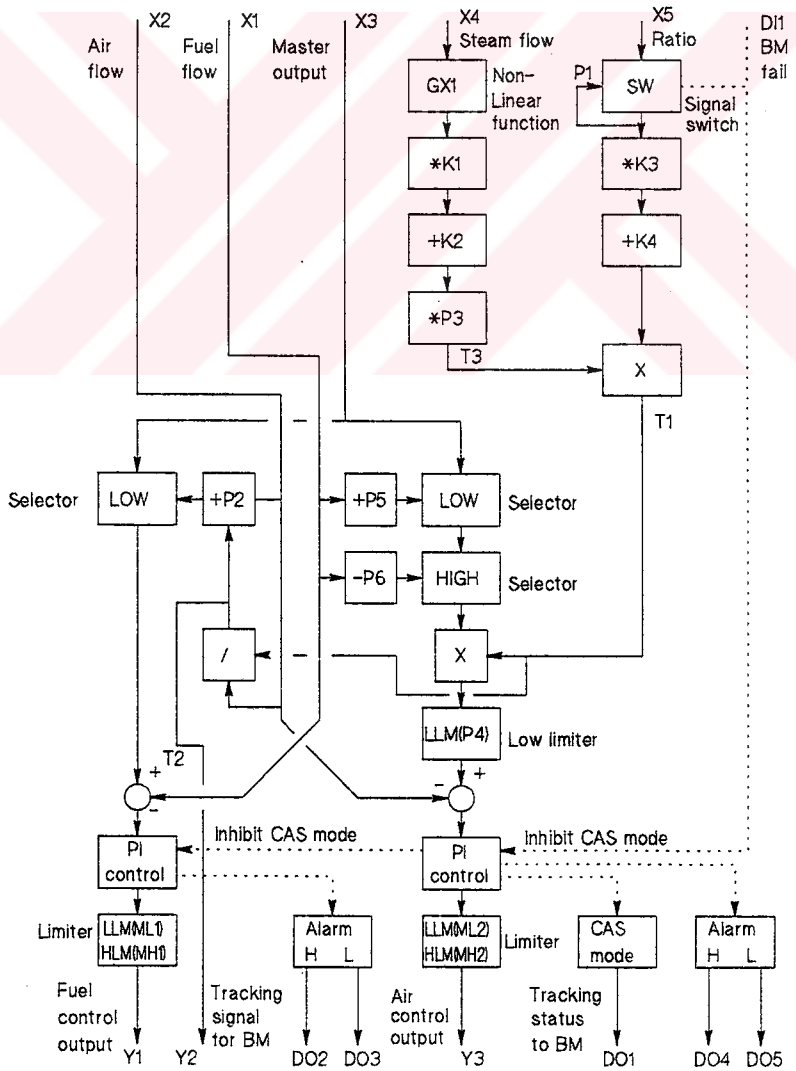


**Figure 5.5 Air-Fuel Ratio Controller**

### 5.3.1 Air-Fuel Ratio Compensation

A line-segment transfer function (GX1) is used to obtain the optimum air-fuel ratio for the load. The segment data is converted to an optimum air-fuel ratio with scaling constants (K1 and K2) as shown in Figure 5.6.

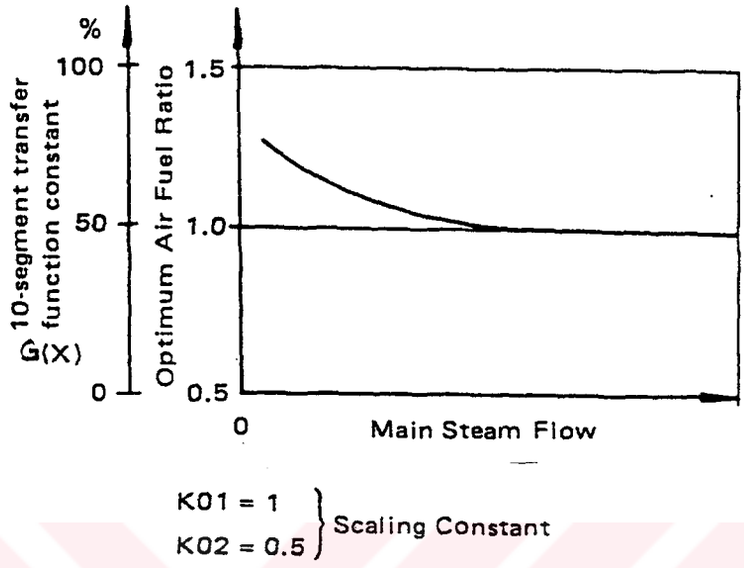


**Figure 5.6 Obtaining The Optimum Air-Fuel Ratio from GX Data**

Air-fuel flow range compensation compensates for the air flow and fuel flow ranges to match the air-fuel ratio. The air-fuel flow range compensating coefficient P3 can be obtained from the following equation;

P3 = Ideal air flow normalized data / Fuel flow normalized data  Equation 5.1

If the air-fuel ratio is 1.0 with a fuel flow of 80% and air flow of 90%, then

P3 = 0.9 / 0.8 = 1.125.

K3 and K4 constants are air-fuel ratio input scaling constants and are used to obtain air-fuel ratio settings. These constants are determined using the air-fuel ratio input range settings.

Gain K3 = Air-fuel ratio span setting.
Bias K4 = Air-fuel ratio minimum value setting.

When the air-fuel ratio setting ranges from 0.8 to 1.5,

Gain K3 = 1.5 - 0.8 = 0.7
Bias K4 = 0.8

### 5.3.2 Cross - Limit (Excess - Air) Circuit

In actual boiler operation, the change of airflow supplied by forced draft fan in the course of fuel flow due to the response speed lag of the control vane and air flow lag[3]. Hence, when the boiler load increases, excess air decreases in the form of a transient with the possibility of black smoke shooting up. Therefore, cross-limit circuit, so called band limit operation, including high-low selector functions is used to ensure a constant and sufficient supply of air even in the event of transient conditions during load changes. Excess-air circuit operates as follows;

1. As the amount of evaporation increases, the boiler master signal increases the air flow setpoint.

2. As the evaporation decreases, the low selector decreases the fuel flow, thus decreasing the air flow setpoint. With this circuit, the air flow does not increase when the evaporation quantity increases unless the air flow increases and combustion control cannot respond to the amount of change of evaporation. In order to avoid this phenomenon, a bias signal is applied so that the air flow and fuel flow can respond to the boiler master signal. In this circuit, emphasis is placed on responding to the changes in the amount of evaporation rather on the temporary heat losses to the temporary excess air.

*1. Fuel low-selector bias (P2)*

Used to set the band limit for fuel flow increases before incrementing the air flow, when the BM control output increases. Normally, the air flow line responds after the fuel flow line, so this limit is useful for preventing black smoke.

*2. Air flow low-selector bias (P5)*

This low-selector bias sets the band limit for air flow increases before incrementing the fuel flow, when the BM control output increases.

*3. Air flow high-selector bias (P6)*

This bias sets the band limit for the air flow decreases prior to reducing the fuel flow, when the BM control output decreases.

*4. Band limit setting*

P2, P5 and P6 parameters are all in fuel flow engineering units and it is recommended that P2,P5 and P6 be set at 2% to maintain follow-up control.

## *5.4 DRUM LEVEL AND FEEDWATER CONTROL*

One YS170 controller is used in cascade operation to enable the drum level to control the water supply valve. For boiler start-up (when there is no steam production), the controller controls only the single element (drum level), but after a bumpless transfer, the three elements (drum level, feedwater and main-steam flow) are controlled. In addition, the controller uses the main-steam flow signal as a feedforward signal for the drum level control to provide a stable control with load changes. The functional block diagram is shown in Figure 5.7.

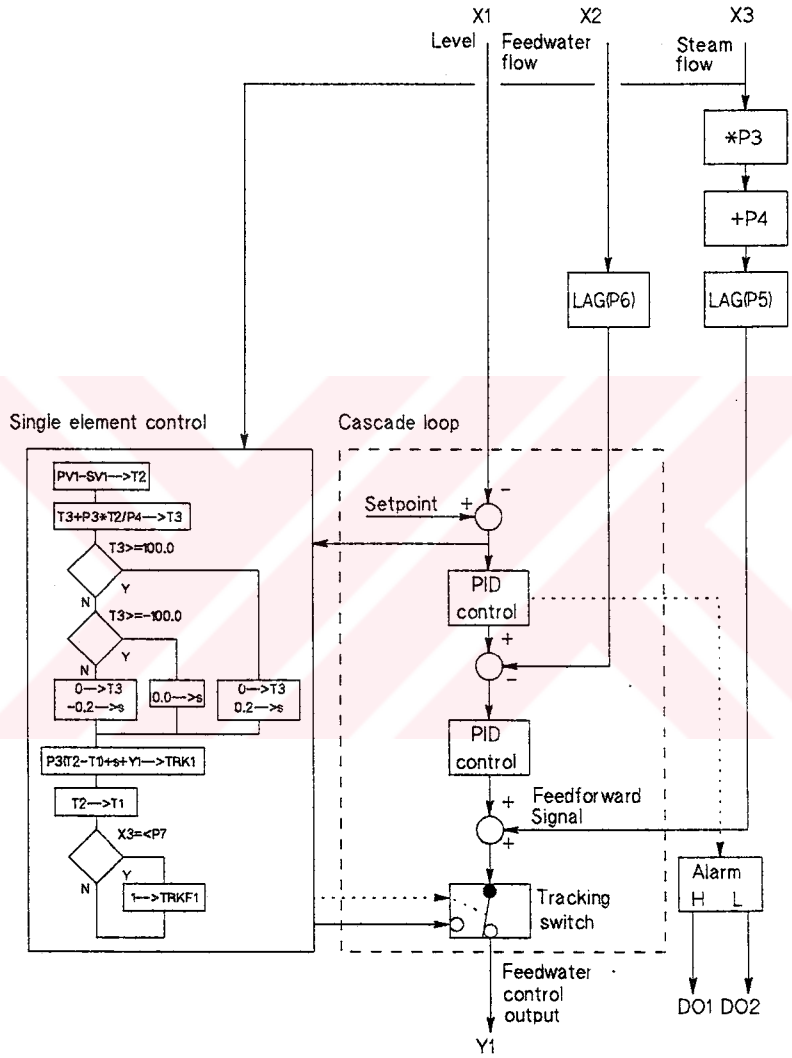


**Figure 5.7 Drum Level and Feedwater Controller**

### 5.4.1 Feedwater Control

The drum level responds in an integrating manner to the steam and feedwater flow, but the response reverses as shown in Figure 5.8, when the amount of steam supplied increases rapidly. When the steam flow increases rapidly, drum pressure falls and the liquid in the drum boils over (see Figure 5.9). YS170 programmable controller can perform cascade control for drum level and feedwater flow, reduce fluctuations in feedwater pressure,

improve feedwater characteristics and also performs another drum level control function that permits drum level or feedwater control to be selected during the system start-up.

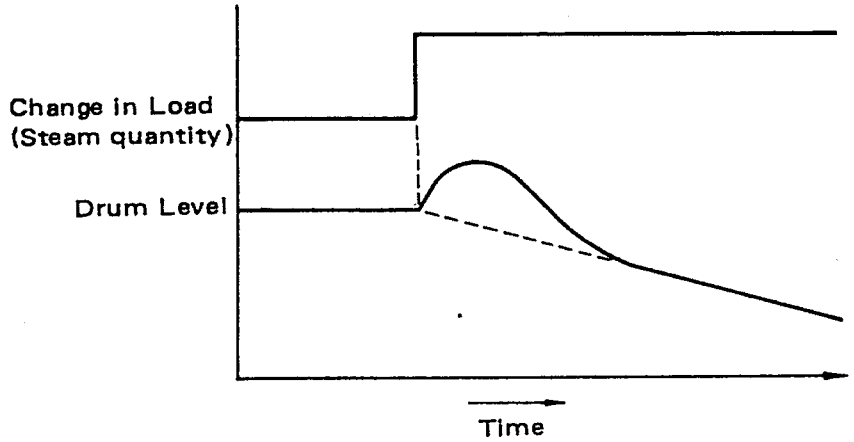


**Figure 5.8 Drum Level Characteristics for Rapid Load Changes**

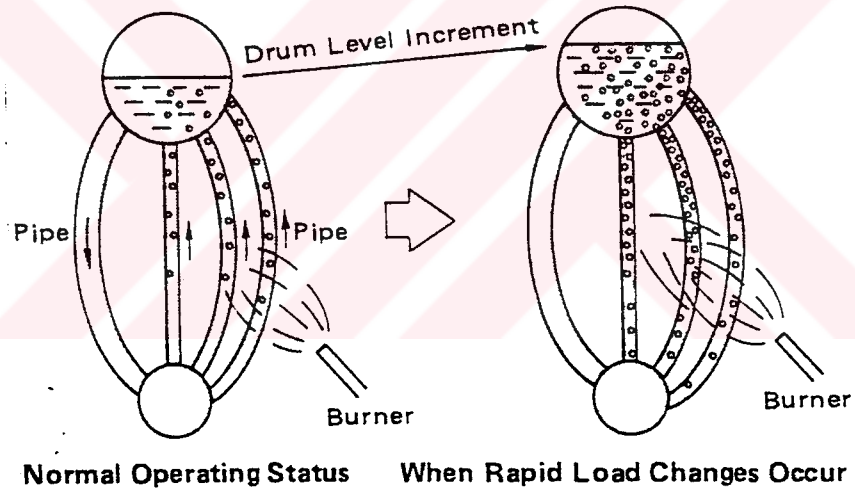


**Figure 5.9 Drum Level Reverse Response**

### 5.4.2 Single-Element Control

When the boiler is started up, the feedwater flow and main-steam flow fall below the low limit resulting in unstable cascade control for drum level and feedwater flow control that uses three-element control philosophy. For stable cascade control, single-element control using a drum level controller is recommended and can be used to directly control the feedwater control valve. Bumplessly transfer between three-element and single element control is accomplished by connecting the single-element computation result to tracking terminal of cascade control element as shown in Figure 5.7.

T.C. YÜKSEKÖĞRETİM KURULU
DOKÜMANTASYON MERKEZİ

Single-element computation function is as follows[9];

$$Y_t = P1\ \{(T2-T1) + T2/P2\} + Y_{t-1} \qquad \text{Equation 5.2}$$

where

$Y_t$ = Current control output
$Y_{t-1}$ = Last control output
P1 = Proportional gain (0 to 8)
P2 = Reset time (0 to 800 sec)
T2 = Current level deviation value
T1 = Last level deviation value

### 5.4.3 Feedforward Computation

A feedforward variation is recommended to maintain a steam-water balance, reducing the influence of shrink-swell and inverse-response phenomena. Feedforward computation forces the feedwater flow to match the steam flow in absence of action by the level controller. The withdrawal of water as blowdown also prevents steam and feedwater flow signals being identical. Therefore, any error in the steam-water balance causes a falling or rising level. As a result, using feedforward computation adjusts the set point of flow difference in advance to strike a steady-state balance. Feedforward computation functions as follows;

1. Feedforward gain (P3) sets the static gain for the steam and feedwater flow.
   P3 = Feedwater flow / Steam flow  Equation 5.3

2. Feedforward bias (P4) allows PID controller output to remain within the normal operating range and it is normally set to 0.5.

3. Feedforward filter time constant (P5) sets the firs-order lag unit for a smooth steam flow signal reducing the steam flow pulsations.

### 5.4.4 Three-Element Control

As described before, the drum level is affected by a fluctuation in the main-steam flow. In order to force the feedwater flow rapidly follow the main-steam flow, three process signals; drum level, feedwater flow and main-steam flow are used, which means that the three process variables influence the feedwater valve position. Three-element control is accomplished in the combination of feedforward and feedback cascade control mode[11]. If a deviation occurs between the main-steam flow and feedwater flow, a corrective action is executed before drum level fluctuates.

## *5.5 MAIN-STEAM TEMPERATURE CONTROL*

Changes in steam temperature can have a great impact on turbine performance as well as on boiler and turbine service life. Boiler main-steam temperature is relatively difficult to control, since boiler temperature measurements lag behind the load changes. Main-steam temperature control is performed by water injection into a desuperheater provided at the outlet of the primary superheater (see Figure 5.10).

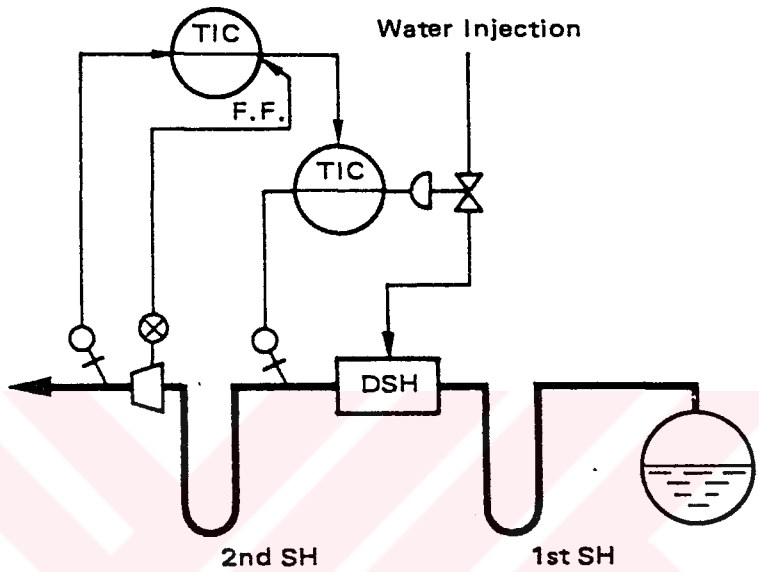


**Figure 5.10 Water Injection for Main-Steam Temperature Control**

One YS170 controller performs cascade control for the secondary superheater outlet temperature and desuperheater outlet temperature to compensate for the response lag due to thermal inertia in the superheater and adds the steam flow signal to the secondary superheater outlet temperature control output as a feedforward signal to improve the control performance . In the case of large-capacity boilers that operate at high pressure and temperature, the response lags become larger, which necessitates high-temperature resistant superheater tube materials and the installation of more than two water spray point stages. The functional block diagram of main-steam temperature controller is shown in Figure 5.11.

### 5.5.1 Feedforward Control Computation

Incrementing or decrementing the main-steam flow causes the desuperheater outlet steam temperature set point to change. Therefore, in order to compensate for superheater excess heat handling capacity caused by variations in the main-steam flow (see Figure 5.12, top), YS170 controller provides steam flow output characteristics using a line-segment transfer function (see Figure 5.12, bottom) to obtain a feedforward signal. The rate of change in set point and desuperheater characteristics are matched by using GX1 characterizer curve. So as

to filter a steam flow change, the first-order lag time constant (P2) and bias (P3) are set to output of GX1 transfer function for feedforward computation.

### 5.5.2 Reset Wind-up Protection

When the boiler load (steam flow) is low, main-steam set point temperature cannot be obtained, even if the cooling (spray) water temperature is zero. At this time, the main-steam temperature controller (CNT1, master) output enables the desuperheater outlet temperature controller (CNT2, slave) to rise the temperature by increasing CNT2 setpoint SV2 to its maximum value.

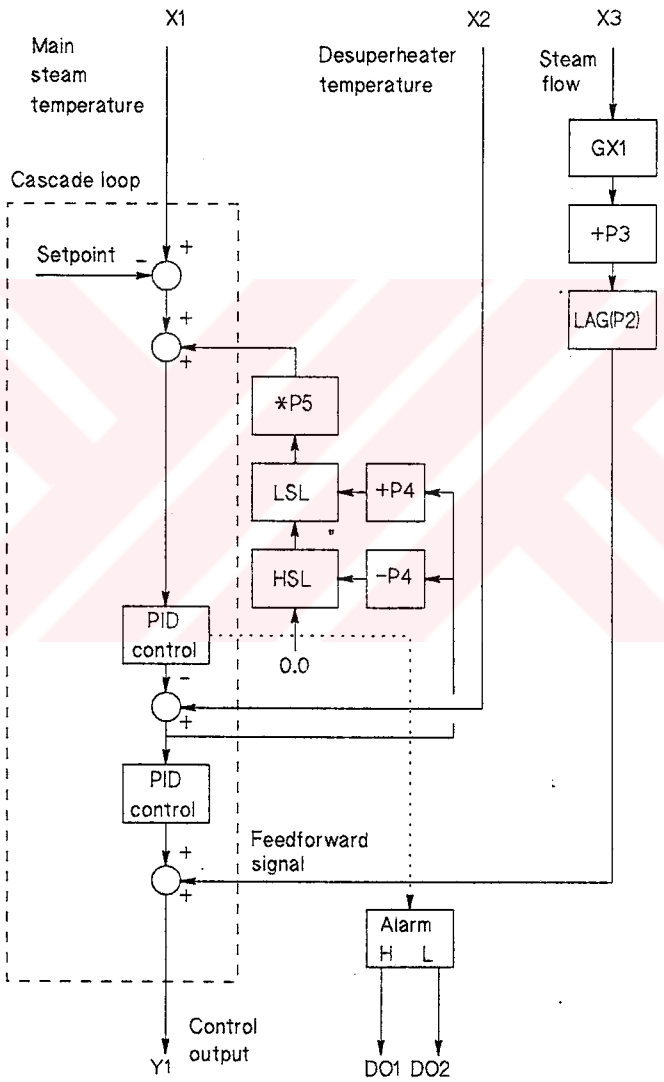


**Figure 5.11 Main-Steam Temperature Controller**

When the boiler load starts to increase, the temperature rises, so SV2 cannot drop, causing the temperature to overshoot, which is called *reset wind-up*. In order to avoid reset wind-up,

the main steam temperature controller is limited so that it cannot produce an excessively large desuperheater outlet steam temperature deviation (see Figure 5.13).

*1. Setting maximum temperature deviation (P4)*

The desuperheater outlet steam temperature allowable deviation (+ε and -ε in Figure 5.13) is set during boiler tuning. If the deviation is too small, control action may be sluggish.

*2. Setting the feedback gain (P5)*

The feedback gain is set to allow the closed limiter circuit (reset limiter) to be operated correctly. P5 = PB / 100 where *PB* is CNT1 controller proportional band.

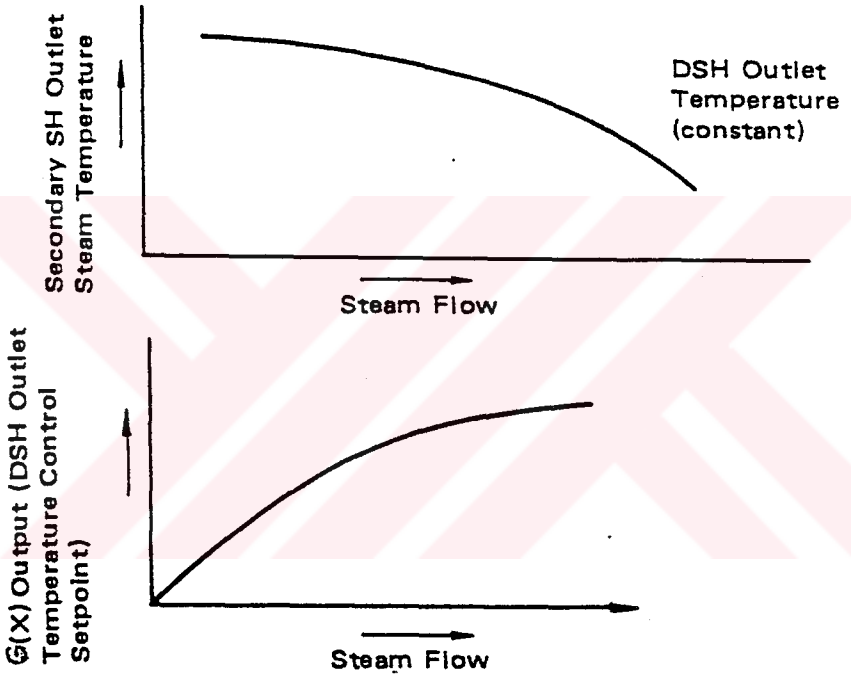


**Figure 5.12 Steam Flow vs. Secondary Superheater Outlet Temperature (Top) Steam Flow vs. GX Output (Bottom)**

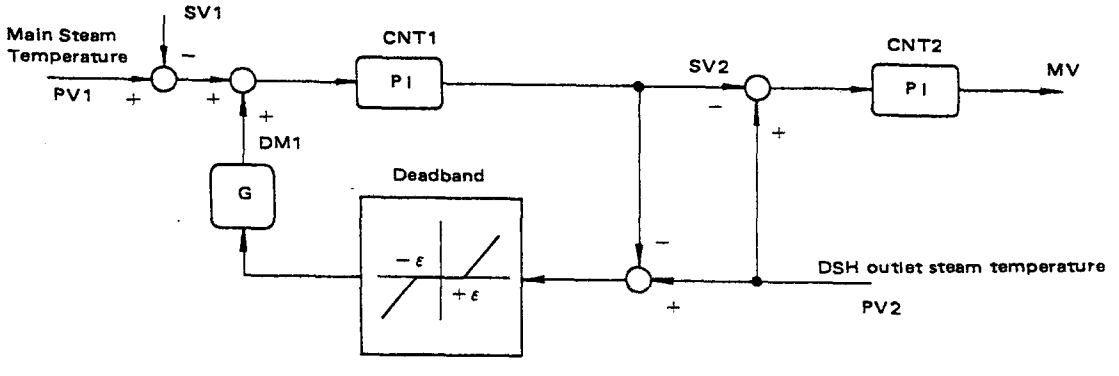


**Figure 5.13 Reset Wind-up Protection Circuit**

## *5.6 CONTROLLER INTERLOCKS (BOILER PROTECTION SYSTEM)*

Boiler master pressure controller, oxygen density controller, and air-fuel controller performing automatic combustion control are the core of automatic boiler control system, Thus, they are the most critical controllers in the system. Controller interlocks logic is designed to safeguard the system against number of dangerous operating conditions, such as operator mistakes, controller failures, etc.

The controllers for boiler master pressure/oxygen density ($BM/O_2$) and air-fuel controller (AFC) have three control modes; AUT (automatic), MAN (manual), and CAS (cascade). In addition to these operation modes, the implemented automatic combustion control system uses the following safety interlocks logic;

1. The fuel controller (BSC1 control module of AFC) cannot be placed in CAS operation, if the oxygen controller (BSC2 control module of $BM/O_2$) is not in CAS operation.

2. BM controller (BSC1 module of $BM/O_2$) tracks the setpoint (internal air ratio of AFC) of air controller (BSC2 module of AFC) to move the BM controller from AUT to CAS operation bumplessly.

3. If fuel flow signal is open (input open), fuel controller is moved to MAN operation automatically.

4. If air controller is not in CAS operation, fuel controller cannot be placed in CAS operation and BM starts to track AFC.

5. If air flow signal is open (input open), air controller is moved to MAN operation automatically.

6. If $BM/O_2$ fails or ratio signal from $O_2$ is open, air controller cannot be placed in CAS mode and it is moved to AUT operation automatically. Therefore, fuel controller is inhibited for CAS operation in this case.

7. If air controller is not in CAS operation, oxygen controller is placed in AUT mode automatically.

8. If $O_2$ is inoperative, BM is moved to AUT mode automatically.

Apart from the safety interlocks logic, alarm functions (H/L alarm check blocks) as digital outputs are provided for all controllers in automatic boiler control system and these digital signals are sent to burner management system (BMS) and master fuel trip (MFT) system to improve safety.

# CHAPTER SIX

# DISCUSSIONS AND CONCLUSIONS

When considering the application of automatic control equipment to steam boilers, we encounter three factors providing us with indications as regards the lines along which we have to proceed. These factors are:

1. *The technical requirements of the installation*

2. *The production requirements*

3. *Economical requirements.*

As far as the technical requirements are concerned, it is obvious that the water level of the steam drum has to be kept between certain limits. Too low a water level may cause serious disturbances in the circulation system, leading to overheating of the water pipes; too high a level water and salt to be carried along with the steam into the superheater and may lead to salt deposits on the superheater tubes.

Another important point is the steam pressure. The maximum steam pressure is normally limited by the setting of the safety valves. A sudden decrease in the steam pressure will cause a step response of the water level in the drum, approximately proportional to dP/dt, due to the effect of a change on the boiling rate. A rapid decrease in the steam pressure may have a serious disturbing effect on the circulation. For these reasons, the change in steam pressure, dP/dt, has to be limited; it should not exceed a value of 3-5% of the normal working pressure per minute.

Also, in view of the permissible temperatures of the materials used, a maximum value of the steam temperature should be defined. Variations in steam temperature have to be kept relatively small, e.g. $\leq 10$ °C; larger variations are permitted only when the rate of change is relatively slow (e.g. 2-3 °C/min), or when they are rare.

Production requirements are determined mainly bay the type of consumer. A boiler is designed to deliver, under stationary conditions, a certain amount of steam (e.g. tons/hour) of a specific quality as regards pressure, temperature and purity; it is essential that these properties must be kept between certain limits upon the occurrence of changes in load and other disturbances.

If steam is used for heating purposes, a constant steam pressure is generally required. However, in many cases it will be difficult to specify the limits between which the pressure may vary, because a clear relationship between pressure variations and economic criteria

does not always exist. In the case of steam being used for feeding a power plant, the importance of a constant pressure is much more obvious.

As variations in load are often limited by the permissible temperature fluctuations in the turbine, we may state that the rate of production as well as the steam temperature should be kept as constant as possible.

One benefit to be gained from steam temperature control is increased boiler load range at desired steam temperature. Turbine efficiency and life is increased by the use of superheated steam due to the reduced fluid friction and erosion in the turbine. Lack of steam temperature control can cause metal failure, thermal expansion which reduces clearances in equipment, and erosion from excessive moisture in the last stages of turbines.

As far as the economical requirements are concerned, we have not discussed the power consumption of feed pumps, draft fans and other auxiliary equipment, but only considered the heat economy of the boiler.

The fuel consumption should be kept at a minimum for all possible loads of the boiler. In relation to the fuel consumption, we may distinguish the following losses:

*a. Losses due to incomplete combustion*

*b. Stack losses*

*c. Losses due to blowdown.*

There is a certain relationship between points *a* and *b*. In order to ensure complete combustion, a certain amount of excess air is required, but too high an excess air will increase the stack losses. The optimum fuel economy, i.e. the best relation between air and fuel flow rates, depends on the load of the boiler. It is obvious that when the load is changing continuously, an automatic control system capable of maintaining the optimum air-fuel ratio will greatly contribute to optimum efficiency being reached.

Heat losses due to blowdown of the boiler are relatively small, because the water and heat will be circulated via the water treating installation. However, blowdown can be optimized by automatically controlling the chloride and conductivity of the boiler water.

One of the main tools used in designed control system is *feedforward control.* In practice, the feedforward control is based on *energy* or *material balance.* The essential factors affecting the process are measured and used in computing the correct output to meet correct energy demands.

Feedforward control computations were used for boiler master pressure control, drum level control and main-steam temperature control loops so as to achieve a high-performance control system.

Feedback control is characterized by the detection of any deviation arising between the desired variable (set point) and the controlled variable (process variable), followed by attempts to eliminate this deviation. Thus, if no deviation is detected, no control actions are taken. If, on the other hand, disturbance in the system can be measured and its influence predicted, countermeasures to prevent the appearance of any deviation can be taken before

hand. In boiler control system, disturbance is load change and steam flow is used as feedforward signal. The usage of feedforward computation will allow the controllers to respond quickly to load changes and prevent the whole system from running into *positive feedback action.*

The overall boiler efficiency is the combined result of its *heat transfer efficiency* and its *combustion efficiency.* Heat transfer efficiency is reflected by stack temperature, which at the hot end should not exceed steam temperature by more than 65 °C when excess air is near optimum. Combustion efficiency is tied to excess oxygen, which is brought as low as possible without exceeding the limits.

When optimization reduces the flue-gas losses, the resulting savings can be estimated from the amount of reduction in these losses. In case of a 45 t/h steam boiler, a 1% reduction in fuel consumption (a 1% increase in efficiency) will lower the yearly operating costs by about $20,000, if the fuel cost is estimated at $2 per million BTU. The fuel savings resulting from improved oxygen control (lowering of excess oxygen) can be computed by using the following equation[9];

$$\Delta Q = Q_B \, [21 \, (O_2{}^B - O_2{}^A) \, / \, (21 - O_2{}^B) \, (23.1 - 0.1 \, O_2{}^B)] \qquad \text{Equation 6.1}$$

where

$\Delta Q$ : Fuel saving rate (%)
$Q_B$ : Heat loss (%) without oxygen control system (see Figure 6.1)
$O_2{}^B$ : Oxygen density (%) in waste gas without oxygen control system
$O_2{}^A$ : Oxygen density (%) in waste gas.

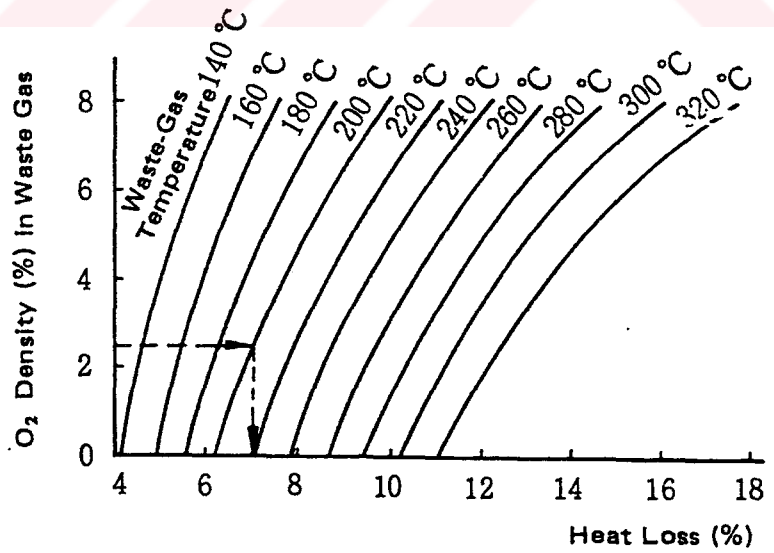


**Figure 6.1 Heat Loss Graph**

The fuel savings resulting from improved thermal efficiency can be estimated from Figure 6.2. Lowering the stack temperature difference from 560 °F to 460 °F at an excess oxygen of 2% will result in a saving of about 2%. Therefore, as a crude approximation, a fuel of saving of 1% can be estimated for each 50 °F reduction in stack gas temperature. As it was discussed already, stack gas temperature reductions must be limited to achieving a temperature above dew point that is high enough to provide the required stack effect.

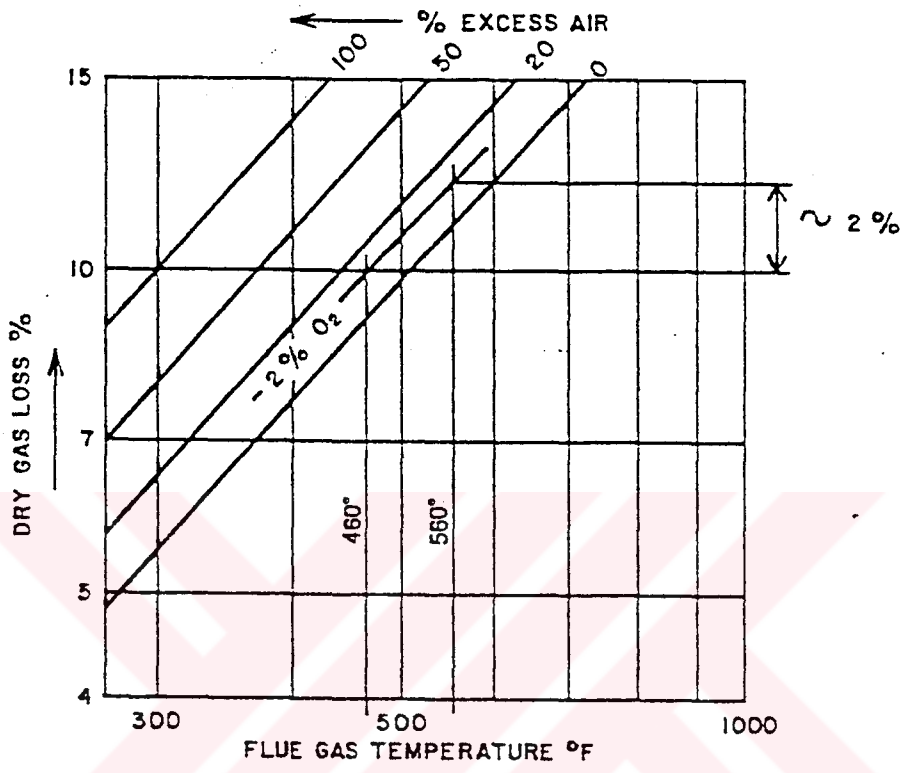


**Figure 6.2 Combustion Efficiency**

Consequently, the total savings from improved thermal and combustion efficiencies can be estimated on the basis of both stack temperature and excess oxygen being lowered to their limits; the resulting total fuel savings can be around 5%. However, without doubt, it can be said that the savings received after implementation of advanced control and optimization techniques depend highly on the plant equipment and complexity of plant configurations and therefore, the control instrumentation should be flexible enough to change control structure, to add new control loops, to configure the control and optimization programs in phases etc.

# REFERENCES


1. Shinskey, F.G. (1978). Energy Conservation through Control. (2nd ed.). New York : McGraw-Hill Book Co.

2. Walsh, T.J. (1981). Controlling Boiler Efficiency. (2nd ed.) New York : McGraw-Hill Book Co.

3. Liptak, B.G. (1985). Process Control. (3rd ed.). Pennsylvania : Chilton Book Co.

4. Shields, C.D. (1978). Boilers: Types, Characteristics and Functions. New York : McGraw-Hill Book Co.

5. Congdon, P. (1981, December ). Control Alternatives for Boilers. In Tech, pp. 11-15.

6. O'Meara, J.E. (1979, March). Oxygen Trim for Combustion Control. In Tech, p. 21.

7. Hockenbury, W.D. (1981, July). Improve Steam Boiler Control. Instruments and Control Systems. pp. 15-18.

8. Yokogawa Electric Co. (1983). Automatic Process Control Lecture Notes. Tokyo

9. Yokogawa Electric Co. (1984). Yewseries 80 Application Guide. Tokyo.

10. Yokogawa Electric Co. (1992). YS170 Control Functions and Applications. Tokyo.

11. Haagen, B.V. (1996, November 26). (Personal interview).

12. Dorresteijn, P. (1996, December 12). (Personal interview).

# APPENDIX-A

***PROGRAM AND INTERNAL PARAMETERS LIST OF BOILER MASTER PRESSURE AND OXYGEN DENSITY CONTROLLER***

Program list File name: BMO21 1997. 1.23

```
==================================================================
0001 ;---------------Boiler master and O2 control-------------------
0002 ;
0003 ;Function:
0004 ;        -Maintains main steam on constant pressure
0005 ;        -Responds to load changes
0006 ;        -Steam flow is feedforward to pressure
0007 ;        -Provides control output for air/fuel controller
0008 ;        -Provides O2 setpoint depending on load changes
0009 ;        -Provider control output for air/fuel controller
0010 ;         ratio input
0011 ;Inputs:
0012 ;        X1 : Steam pressure
0013 ;        X2 : O2 density
0014 ;        X3 : Steam flow (feedforward)
0015 ;        X4 : Tracking input from air/fuel (Y2 output)
0016 ;        DI1: Tracking input from air/fuel (DO1 output)
0017 ;Outputs:
0018 ;        Y1 : Control output master pressure goes to air/fuel
0019 ;             controller (X3 input)
0020 ;        Y3 : Control output O2 density, air/fuel ratio signal
0021 ;             for air/fuel controller (X5 input)
0022 ;        DO1: Alarm output low master pressure
0023 ;        DO2: Alarm output high master pressure
0024 ;Parameters:
0025 ;        P1 : Feedforward gain
0026 ;        P2 : Feedforward bias
0027 ;        P3 : Derivative time constant feedforward master press.
0028 ;        P4 : Derivative gain feedforward master pressure
0029 ;        P5 : O2 bias setting
0030 ;        P6 : O2 bias value
0031 ;        P7 : Time constant O2 density setpoint
0032 ;        P8 : Moving average time O2 density
0033 ;        P9 : Output low limit master pressure
0034 ;        P10: Output high limit master pressure
0035 ;
0036 ;----------------Tracking function----------------------------
0037 LD X4            ;Tracking signal from Air/fuel (Y2)
0038 ST TRK1
0039 LD DI1
0040 NOT
0041 GIFSUB @TRACKING
0042 ;---------------Feedforward-----------------------------------
0043 LD X3            ;Steam flow
0044 LD P1            ;Feedforward gain
0045 *
0046 LD P2            ;Feedforward bias
0047 -
0048 LD X3            ;Steam flow
0049 LD P3            ;Derivative time constant
0050 LED1
0051 LD P4            ;Derivative gain
0052 *
0053 +
0054 ST FF1           ;Feedforward input boiler master pressure
0055 ;---------------Master pressure control-----------------------
```

```
0056 LD X1            ;Master pressure
0057 BSC1             ;Control
0058 ST Y1            ;Output to Air/fuel controller (X3 input)
0059 ;---------------O2 bias setpoint-------------------------------
0060 LD X3            ;Steam flow
0061 GX1              ;O2 density characteristics
0062 LD P5            ;O2 bias setting
0063 LD K1            ;Low limit O2 bias
0064 LLM
0065 LD K2            ;High limit O2 bias
0066 HLM
0067 ST P5
0068 +
0069 ST P6            ;Bias value
0070 LD P7            ;Time constant
0071 LAG1
0072 ST SV2           ;Bias value send to O2 setpoint
0073 ;---------------O2 density control-----------------------------
0074 LD X2            ;O2 density
0075 LD P8            ;Moving average time
0076 MAV1
0077 BSC2             ;O2 density control
0078 LD ML2           ;Low output limit
0079 LLM
0080 LD MH2           ;High output limit
0081 HLM
0082 ST Y3            ;Output to Air/fuel controller (X5 input)
0083 ;---------------Alarms-----------------------------------------
0084 LD PLF1          ;Low alarm master pressure flow
0085 ST DO1
0086 LD PHF1          ;High alarm master pressure flow
0087 ST DO2
0088 ;---------------End of main program----------------------------
0089 END
0090 SUB @TRACKING
0091 LD K29           ;K29=100.0
0092 ST TRKF1         ;Master pressure controller in tracking
0093 RTN
0094
```

==========

Parameter list 1/4 File name: BMO21 1997. 1.23

<<Configuration 1>>

| | | |
|---|---|---|
| CYCL | Control Period | 100ms |
| DIO1 | DI1/DO6 Set | IN |
| DIO2 | DI2/DO5 Set | IN |
| DIO3 | DI3/DO4 Set | IN |
| DIO4 | DI4/DO3 Set | IN |
| DIO5 | DI5/DO2 Set | OUT |
| DIO6 | DI6/DO1 Set | OUT |
| ATSEL | Auto Selector | LOW |
| START | Start Mode | TIM1 |

| <<Configuration 2-1>> | | | <<Configuration 2-2>> | |
|---|---|---|---|---|
| CMOD1 | Cascade Mode | - | CMOD2 | - |
| BMOD1 | Back Up Mode | BUM | BMOD2 | BUM |
| CNT1 | Control Type | PID | CNT2 | PID |
| ALG1 | Control Computation | I-PD | ALG2 | I-PD |
| ACT1 | Direct/Reverse Action | RVS | ACT2 | RVS |
| VDIR1 | Valve Action | C-O | VDIR2 | C-O |
| SCH1 | Scale(100%) | 1000 | SCH2 | 5000 |
| SCL1 | Scale(0%) | 0 | SCL2 | 0 |
| SCDP1 | Decimal Point | 3 | SCDP2 | 1 |
| SCDV1 | Scale Division | 1 | SCDV2 | 1 |
| UNIT1 | Unit | % | UNIT2 | % |
| TRDT1 | Trend Scale | 1M | TRDT2 | 1M |
| TAG1 | Tag No. | PICMASTER | TAG2 | O2 DENS |

| <<PID Parameters 1>> | | | | <<PID Parameters 2>> | | |
|---|---|---|---|---|---|---|
| SV1 | SV initial start val | -6.3 | | SV2 | -0.315 | |
| PB1 | Proportional Band | 999.9 | % | PB2 | 999.9 | % |
| TI1 | Integral Time | 1000 | S | TI2 | 1000 | S |
| TD1 | Derivative Time | 0 | S | TD2 | 0 | S |
| SFA1 | SV Filter A | 0.000 | | SFA2 | 0.000 | |
| SFB1 | SV Filter B | 0.000 | | SFB2 | 0.000 | |
| GW1 | Non-Linear Gap | 0.0 | % | GW2 | 0.0 | % |
| GG1 | Non-Linear Gain | 1.000 | | GG2 | 1.000 | |
| PH1 | PV High Limit Alarm | 106.3 | | PH2 | 5.315 | |
| PL1 | PV Low Limit Alarm | -6.3 | | PL2 | -0.315 | |
| DL1 | Deviation Limit Alarm | 106.3 | | DL2 | 5.315 | |
| VL1 | Velocity Limit Alarm | 106.3 | | VL2 | 5.315 | |
| VT1 | V.L.A.Time Span | 1 | S | VT2 | 1 | S |
| MH1 | MV High Limit | 106.3 | % | MH2 | 106.3 | % |
| ML1 | MV Low Limit | -6.3 | % | ML2 | -6.3 | % |
| MR1 | Manual Reset | -6.3 | % | MR2 | -6.3 | % |
| RB1 | Reset Bias | 0.0 | % | RB2 | 0.0 | % |
| PMV1 | Preset MV | -6.3 | % | PMV2 | -6.3 | % |

<<Sample and Batch Control Parameters>>

| | | | | | | |
|---|---|---|---|---|---|---|
| STM1 | Sampling Period | 0 | S | STM2 | 0 | S |
| SWD1 | Control Time | 0 | S | SWD2 | 0 | S |
| BD1 | Deviation Set Point | 0.0 | % | BD2 | 0.0 | % |
| BB1 | Bias Value | 0.0 | % | BB2 | 0.0 | % |
| BL1 | Lock Up Span | 0.0 | % | BL2 | 0.0 | % |

Parameter list 2/4 File name: BMO21 1997. 1.23

<<STC Parameters 1>> <<STC Parameters 2>>

| | | | | | |
|---|---|---|---|---|---|
| STC | STC Operation Mode | OFF | | | |
| IP1 | Process Type | STATIC | IP2 | STATIC | |
| TR1 | Process Response Time | 300 | S | TR2 | 300 S |
| NB1 | Noise Band | 0.0 | | NB2 | 0.000 |
| OS1 | Control Target Type | MED | | OS2 | MED |
| MI1 | MV Interference | 5.0 | % | MI2 | 5.0 % |
| PMX1 | PB Upper Limit | 999.9 | % | PMX2 | 999.9 % |
| PMN1 | PB Lower Limit | 2.0 | % | PMN2 | 2.0 % |
| IMX1 | TI Upper Limit | 9999 | S | IMX2 | 9999 S |
| IMN1 | TI Lower Limit | 1 | S | IMN2 | 1 S |
| DMX1 | TD Upper Limit | 2000 | S | DMX2 | 2000 S |

<<Preset PID Parameters>>

| | PB(%) | TI(S) | TD(S) |
|---|---|---|---|
| 01 | 999.9 | 1000 | 0 |
| 02 | 999.9 | 1000 | 0 |
| 03 | 999.9 | 1000 | 0 |
| 04 | 999.9 | 1000 | 0 |
| 05 | 999.9 | 1000 | 0 |
| 06 | 999.9 | 1000 | 0 |
| 07 | 999.9 | 1000 | 0 |
| 08 | 999.9 | 1000 | 0 |

<<Program Set Parameters>>

| | TIME(S) | OUTPUT(%) |
|---|---|---|
| 101 | 0 | 0.0 |
| 102 | 0 | 0.0 |
| 103 | 0 | 0.0 |
| 104 | 0 | 0.0 |
| 105 | 0 | 0.0 |
| 106 | 0 | 0.0 |
| 107 | 0 | 0.0 |
| 108 | 0 | 0.0 |
| 109 | 0 | 0.0 |
| 110 | 0 | 0.0 |

<<FX1 Table>> <<FX2 Table>>

| | VALUE(%) | | VALUE(%) |
|---|---|---|---|
| 101 | 0.0 | 201 | 0.0 |
| 102 | 10.0 | 202 | 10.0 |
| 103 | 20.0 | 203 | 20.0 |
| 104 | 30.0 | 204 | 30.0 |
| 105 | 40.0 | 205 | 40.0 |
| 106 | 50.0 | 206 | 50.0 |
| 107 | 60.0 | 207 | 60.0 |
| 108 | 70.0 | 208 | 70.0 |
| 109 | 80.0 | 209 | 80.0 |
| 110 | 90.0 | 210 | 90.0 |
| 111 | 100.0 | 211 | 100.0 |

Parameter list 3/4 File name: BMO21 1997. 1.23

<<GX1 Table >>

| | INPUT(%) | OUTPUT(%) |
|---|---|---|
| 101 | 0.0 | 2.5 |
| 102 | 10.0 | 1.5 |
| 103 | 20.0 | 1.0 |
| 104 | 30.0 | 0.5 |
| 105 | 40.0 | 0.5 |
| 106 | 50.0 | 0.5 |
| 107 | 60.0 | 0.5 |
| 108 | 70.0 | 0.5 |
| 109 | 80.0 | 0.5 |
| 110 | 90.0 | 0.5 |
| 111 | 100.0 | 0.5 |

<<GX2 Table >>

| | INPUT(%) | OUTPUT(%) |
|---|---|---|
| 201 | 0.0 | 0.0 |
| 202 | 10.0 | 10.0 |
| 203 | 20.0 | 20.0 |
| 204 | 30.0 | 30.0 |
| 205 | 40.0 | 40.0 |
| 206 | 50.0 | 50.0 |
| 207 | 60.0 | 60.0 |
| 208 | 70.0 | 70.0 |
| 209 | 80.0 | 80.0 |
| 210 | 90.0 | 90.0 |
| 211 | 100.0 | 100.0 |

<<P Parameters 1/2>>

| | | |
|---|---|---|
| 01 | 1 | Feedforward gain steam flow |
| 02 | 0.0 | Feedforward bias steam flow |
| 03 | 0.0 | Derivative time constant in seconds |
| 04 | 0 | Derivative gain |
| 05 | 0.000 | O2 bias setting in % |
| 06 | 0.000 | O2 bias (display only) |
| 07 | 0.0 | Time constant O2 density setpoint secs |
| 08 | 10 | Moving average filter time in seconds |
| 09 | 0.0 | Output low limiter master pressure |
| 10 | 100.0 | Output high limiter master pressure |
| 11 | 0.0 | |
| 12 | 0.0 | |
| 13 | 0.0 | |
| 14 | 0.0 | |
| 15 | 0.0 | |

<<P Parameters 2/2>>

| | |
|---|---|
| 16 | 0.0 |
| 17 | 0.0 |
| 18 | 0.0 |
| 19 | 0.0 |
| 20 | 0.0 |
| 21 | 0.0 |
| 22 | 0.0 |
| 23 | 0.0 |
| 24 | 0.0 |
| 25 | 0.0 |
| 26 | 0.0 |
| 27 | 0.0 |
| 28 | 0.0 |
| 29 | 0.0 |
| 30 | 0.0 |

Parameter list 4/4 File name: BMO21 1997. 1.23

==========

<<P Scales>>

| | 100% VALUE | 0% VALUE | DP |
|---|---|---|---|
| 01 | 1000 | 0 | 4 |
| 02 | 1000 | 0 | 3 |
| 03 | 1000 | 0 | 3 |
| 04 | 1000 | 0 | 4 |
| 05 | 5000 | 0 | 1 |
| 06 | 5000 | 0 | 1 |
| 07 | 1000 | 0 | 3 |
| 08 | 1000 | 0 | 4 |

<<K Constants 1/2>>

| | | |
|---|---|---|
| 01 | -3.0 | Bias setpoint low limit |
| 02 | 3.0 | Bias setpoint high limit |
| 03 | 0.0 | |
| 04 | 0.0 | |
| 05 | 0.0 | |
| 06 | 0.0 | |
| 07 | 0.0 | |
| 08 | 0.0 | |
| 09 | 0.0 | |
| 10 | 0.0 | |
| 11 | 0.0 | |
| 12 | 0.0 | |
| 13 | 0.0 | |
| 14 | 0.0 | |
| 15 | 0.0 | |

<<K Constants 2/2>>

| | | |
|---|---|---|
| 16 | 0.0 | |
| 17 | 0.0 | |
| 18 | 0.0 | |
| 19 | 0.0 | |
| 20 | 0.0 | |
| 21 | 0.0 | |
| 22 | 0.0 | |
| 23 | 0.0 | |
| 24 | 0.0 | |
| 25 | 0.0 | |
| 26 | 0.0 | |
| 27 | 0.0 | |
| 28 | 0.0 | |
| 29 | 100.0 | constant "1" |
| 30 | 0.0 | |

<<X Scales>>

| | 100% VALUE | 0% VALUE | DP |
|---|---|---|---|
| 01 | 1000 | 0 | 3 |
| 02 | 1000 | 0 | 3 |
| 03 | 1000 | 0 | 3 |
| 04 | 1000 | 0 | 3 |
| 05 | 1000 | 0 | 3 |

==========

# APPENDIX-B

***PROGRAM AND INTERNAL PARAMETERS LIST OF AIR-FUEL RATIO CONTROLLER***

```
Program list                File name: AIRFUEL1    1997. 1.23
=====================================================================
0001 ;---------------Air/fuel control-----------------------------
0002 ;
0003 ;Function:
0004 ;        -Provide fuel control output
0005 ;        -Provide air control output
0006 ;        -Calculate air and fuel setpoint in accordance to ratic
0007 ;         and load
0008 ;        -Provide safe operation due to "Excess air" circuit
0009 ;Inputs:
0010 ;        X1 : Fuel flow
0011 ;        X2 : Air flow
0012 ;        X3 : Master pressure input
0013 ;        X4 : Steam flow (feedforward and load signal)
0014 ;        X5 : Ratio input from O2 density controller
0015 ;        DI1: Interlock input from fail output master pressure
0016 ;             controller
0017 ;Outputs:
0018 ;        Y1 : Control output fuel
0019 ;        Y2 : Tracking output for boiler master pressure
0020 ;        Y3 : Control output air
0021 ;        DO1: Tracking status for boiler master pressure
0022 ;        DO2: Low alarm status output fuel
0023 ;        DO3: High alarm status output fuel
0024 ;        DO4: Low alarm status output air
0025 ;        DO5: High alarm status output air
0026 ;Parameters:
0027 ;        P1 : Air/fuel setpoint calculated
0028 ;        P2 : Low selector fuel bias
0029 ;        P3 : Air/fuel range compensation
0030 ;        P4 : Low limit setting air flow
0031 ;        P5 : Low selector air bias
0032 ;        P6 : High selector air bias
0033 ;
0034 ;---------------O2 ratio calculation-------------------------
0035 LD X2            ;Air flow
0036 LD X4            ;Main steam flow
0037 GX1              ;Air/fuel ratio compensation
0038 LD K1            ;Scale multiplication factor
0039 *
0040 LD K2            ;Scale bias factor
0041 +
0042 LD P3            ;Air/fuel range compensation
0043 *
0044 ST T3
0045 LD P1            ;Air/fuel ratio setpoint calculated
0046 LD X5            ;Air/fuel ratio remote setpoint
0047 LD DI1           ;O2 density fail contact
0048 LD IOPX5         ;Input open X5
0049 NOT
0050 AND
0051 ST CAF2          ;When DI1=0 or X5 IOP inhibit CAS mode air con
0052 SW               ;When DI1=0 or X5 IOP --> P1, otherwise --> X5
0053 ST P1            ;Air/fuel ratio setpoint calculated
0054 LD K3            ;Scale multiplication factor
0055 *
```

```
0056 LD K4            ;Scale bias factor
0057 +
0058 *
0059 ST T1            ;internal air ratio
0060 ;---------------Excess air circuit---------------------------
0061 /
0062 ST T2            ;internal fuel ratio
0063 ST Y2            ;Retransmission for boiler pressure tracking
0064 LD P2            ;Low selector fuel bias
0065 +
0066 LSL              ;Low selector
0067 ST T3            ;Setpoint fuel
0068 GOSUB @FUELCONT
0069 LD X1            ;Fuel flow
0070 LD P5            ;Low selector air bias
0071 +
0072 LD X3            ;Boiler master output (pressure)
0073 LSL              ;Low selector
0074 LD X1            ;Fuel flow
0075 LD P6            ;High selector air bias
0076 -
0077 HSL              ;High selector
0078 LD T1            ;internal air ratio
0079 *
0080 LD P4            ;Low limit setting air flow
0081 LLM              ;Low limiter
0082 ST T4            ;Setpoint air
0083 GOSUB @AIRCONT
0084 LD CAF2          ;Local (0) / remote (1) air setpoint
0085 NOT
0086 ST DO1           ;Digital output 1, (0) normal, (1) tracking
0087 GOSUB @ALARM     ;                                       to BM
0088 END
0089 ;---------------Subprograms----------------------------------
0090 ;---------------Fuel control---------------------------------
0091 SUB @FUELCONT
0092 LD IOPX1         ;Input open X1
0093 CCD1
0094 NOT
0095 ST CAMF1         ;Input X1 open --> MAN mode
0096 LD CAF2          ;Local (0) / remote (1) air setpoint
0097 GIF @CNT1
0098 LD K30           ;K30=0.0
0099 ST CAF1          ;Fuel controller inhibited for cascade mode
0100 @CNT1
0101 LD T3            ;Fuel setpoint
0102 ST CSV1          ;Remote setpoint fuel input
0103 LD X1            ;Fuel flow
0104 BSC1             ;Fuel control
0105 LD ML1           ;Output low limit
0106 LLM
0107 LD MH1           ;Output high limit
0108 HLM
0109 ST Y1            ;Fuel control output
0110 RTN
0111 ;---------------Air control----------------------------------
0112 SUB @AIRCONT
0113 LD IOPX2         ;Input open X2
0114 CCD2
0115 NOT
```

```
0116 ST CAMF2          ;Input X2 open --> MAN mode
0117 LD DI2            ;Boiler master fail signal
0118 GIF @CNT2
0119 LD K30            ;K30=0.0
0120 ST CAF2           ;Air controller inhibited for cascade mode
0121 @CNT2
0122 LD T4             ;Air setpoint
0123 ST CSV2           ;Remote setpoint air input
0124 LD X2             ;Air flow
0125 BSC2              ;Air control
0126 LD ML2            ;Output low limit
0127 LLM
0128 LD MH2            ;Output high limit
0129 HLM
0130 ST Y3             ;Air control output
0131 RTN
0132 ;---------------Alarm outputs--------------------------------
0133 SUB @ALARM
0134 LD PLF1           ;Fuel low alarm flag
0135 ST DO2            ;Fuel low alarm output
0136 LD PHF1           ;Fuel high alarm flag
0137 ST DO3            ;Fuel high alarm output
0138 LD PLF2           ;Air low alarm flag
0139 ST DO4            ;Air low alarm output
0140 LD PHF2           ;Air high alarm flag
0141 ST DO5            ;Air high alarm output
0142 RTN
0143
```

==========

Parameter list 1/4 File name: AIRFUEL1 1997. 1.23

<<Configuration 1>>

| | | |
|---|---|---|
| CYCL | Control Period | 100ms |
| DIO1 | DI1/DO6 Set | IN |
| DIO2 | DI2/DO5 Set | OUT |
| DIO3 | DI3/DO4 Set | OUT |
| DIO4 | DI4/DO3 Set | OUT |
| DIO5 | DI5/DO2 Set | OUT |
| DIO6 | DI6/DO1 Set | OUT |
| ATSEL | Auto Selector | LOW |
| START | Start Mode | TIM1 |

| <<Configuration 2-1>> | | | <<Configuration 2-2>> | |
|---|---|---|---|---|
| CMOD1 | Cascade Mode | CAS | CMOD2 | CAS |
| BMOD1 | Back Up Mode | BUM | BMOD2 | BUM |
| CNT1 | Control Type | PID | CNT2 | PID |
| ALG1 | Control Computation | I-PD | ALG2 | I-PD |
| ACT1 | Direct/Reverse Action | RVS | ACT2 | RVS |
| VDIR1 | Valve Action | C-O | VDIR2 | C-O |
| SCH1 | Scale(100%) | 1000 | SCH2 | 1000 |
| SCL1 | Scale(0%) | 0 | SCL2 | 0 |
| SCDP1 | Decimal Point | 3 | SCDP2 | 3 |
| SCDV1 | Scale Division | 1 | SCDV2 | 1 |
| UNIT1 | Unit | % | UNIT2 | % |
| TRDT1 | Trend Scale | 1M | TRDT2 | 1M |
| TAG1 | Tag No. | --FUEL-- | TAG2 | --AIR-- |

| <<PID Parameters 1>> | | | | <<PID Parameters 2>> | | |
|---|---|---|---|---|---|---|
| SV1 | SV initial start val | -6.3 | | SV2 | -6.3 | |
| PB1 | Proportional Band | 999.9 | % | PB2 | 999.9 | % |
| TI1 | Integral Time | 1000 | S | TI2 | 1000 | S |
| TD1 | Derivative Time | 0 | S | TD2 | 0 | S |
| SFA1 | SV Filter A | 0.000 | | SFA2 | 0.000 | |
| SFB1 | SV Filter B | 0.000 | | SFB2 | 0.000 | |
| GW1 | Non-Linear Gap | 0.0 | % | GW2 | 0.0 | % |
| GG1 | Non-Linear Gain | 1.000 | | GG2 | 1.000 | |
| PH1 | PV High Limit Alarm | 106.3 | | PH2 | 106.3 | |
| PL1 | PV Low Limit Alarm | -6.3 | | PL2 | -6.3 | |
| DL1 | Deviation Limit Alarm | 106.3 | | DL2 | 106.3 | |
| VL1 | Velocity Limit Alarm | 106.3 | | VL2 | 106.3 | |
| VT1 | V.L.A.Time Span | 1 | S | VT2 | 1 | S |
| MH1 | MV High Limit | 106.3 | % | MH2 | 106.3 | % |
| ML1 | MV Low Limit | -6.3 | % | ML2 | -6.3 | % |
| MR1 | Manual Reset | -6.3 | % | MR2 | -6.3 | % |
| RB1 | Reset Bias | 0.0 | % | RB2 | 0.0 | % |
| PMV1 | Preset MV | -6.3 | % | PMV2 | -6.3 | % |

<<Sample and Batch Control Parameters>>

| | | | | | | |
|---|---|---|---|---|---|---|
| STM1 | Sampling Period | 0 | S | STM2 | 0 | S |
| SWD1 | Control Time | 0 | S | SWD2 | 0 | S |
| BD1 | Deviation Set Point | 0.0 | % | BD2 | 0.0 | % |
| BB1 | Bias Value | 0.0 | % | BB2 | 0.0 | % |
| BL1 | Lock Up Span | 0.0 | % | BL2 | 0.0 | % |

Parameter list 2/4 File name: AIRFUEL1 1997. 1.23

==========

| <<STC Parameters 1>> | | | <<STC Parameters 2>> | |
|---|---|---|---|---|
| STC | STC Operation Mode | OFF | | |
| IP1 | Process Type | STATIC | IP2 | STATIC |
| TR1 | Process Response Time | 300 S | TR2 | 300 S |
| NB1 | Noise Band | 0.0 | NB2 | 0.0 |
| OS1 | Control Target Type | MED | OS2 | MED |
| MI1 | MV Interference | 5.0 % | MI2 | 5.0 % |
| PMX1 | PB Upper Limit | 999.9 % | PMX2 | 999.9 % |
| PMN1 | PB Lower Limit | 2.0 % | PMN2 | 2.0 % |
| IMX1 | TI Upper Limit | 9999 S | IMX2 | 9999 S |
| IMN1 | TI Lower Limit | 1 S | IMN2 | 1 S |
| DMX1 | TD Upper Limit | 2000 S | DMX2 | 2000 S |

<<Preset PID Parameters>>

| | PB(%) | TI(S) | TD(S) |
|---|---|---|---|
| 01 | 999.9 | 1000 | 0 |
| 02 | 999.9 | 1000 | 0 |
| 03 | 999.9 | 1000 | 0 |
| 04 | 999.9 | 1000 | 0 |
| 05 | 999.9 | 1000 | 0 |
| 06 | 999.9 | 1000 | 0 |
| 07 | 999.9 | 1000 | 0 |
| 08 | 999.9 | 1000 | 0 |

<<Program Set Parameters>>

| | TIME(S) | OUTPUT(%) |
|---|---|---|
| 101 | 0 | 0.0 |
| 102 | 0 | 0.0 |
| 103 | 0 | 0.0 |
| 104 | 0 | 0.0 |
| 105 | 0 | 0.0 |
| 106 | 0 | 0.0 |
| 107 | 0 | 0.0 |
| 108 | 0 | 0.0 |
| 109 | 0 | 0.0 |
| 110 | 0 | 0.0 |

| <<FX1 Table>> | | <<FX2 Table>> | |
|---|---|---|---|
| | VALUE(%) | | VALUE(%) |
| 101 | 0.0 | 201 | 0.0 |
| 102 | 10.0 | 202 | 10.0 |
| 103 | 20.0 | 203 | 20.0 |
| 104 | 30.0 | 204 | 30.0 |
| 105 | 40.0 | 205 | 40.0 |
| 106 | 50.0 | 206 | 50.0 |
| 107 | 60.0 | 207 | 60.0 |
| 108 | 70.0 | 208 | 70.0 |
| 109 | 80.0 | 209 | 80.0 |
| 110 | 90.0 | 210 | 90.0 |
| 111 | 100.0 | 211 | 100.0 |

==========

Parameter list 3/4 File name: AIRFUEL1 1997. 1.23

<<GX1 Table >>

| | INPUT(%) | OUTPUT(%) |
|---|---|---|
| 101 | 0.0 | 70.0 |
| 102 | 10.0 | 65.0 |
| 103 | 20.0 | 60.0 |
| 104 | 30.0 | 55.0 |
| 105 | 40.0 | 50.0 |
| 106 | 50.0 | 50.0 |
| 107 | 60.0 | 50.0 |
| 108 | 70.0 | 50.0 |
| 109 | 80.0 | 50.0 |
| 110 | 90.0 | 50.0 |
| 111 | 100.0 | 50.0 |

<<GX2 Table >>

| | INPUT(%) | OUTPUT(%) |
|---|---|---|
| 201 | 0.0 | 0.0 |
| 202 | 10.0 | 10.0 |
| 203 | 20.0 | 20.0 |
| 204 | 30.0 | 30.0 |
| 205 | 40.0 | 40.0 |
| 206 | 50.0 | 50.0 |
| 207 | 60.0 | 60.0 |
| 208 | 70.0 | 70.0 |
| 209 | 80.0 | 80.0 |
| 210 | 90.0 | 90.0 |
| 211 | 100.0 | 100.0 |

<<P Parameters 1/2>>

| | | |
|---|---|---|
| 01 | 0.0 | Ratio input (display only) |
| 02 | 2.0 | Low selector fuel bias |
| 03 | 1.000 | Air/fuel range computation |
| 04 | 10.0 | Low limit setting air flow |
| 05 | 2.0 | Low selector air bias |
| 06 | 2.0 | High selector air bias |
| 07 | 0.0 | |
| 08 | 0.0 | |
| 09 | 0.0 | |
| 10 | 0.0 | |
| 11 | 0.0 | |
| 12 | 0.0 | |
| 13 | 0.0 | |
| 14 | 0.0 | |
| 15 | 0.0 | |

<<P Parameters 2/2>>

| | |
|---|---|
| 16 | 0.0 |
| 17 | 0.0 |
| 18 | 0.0 |
| 19 | 0.0 |
| 20 | 0.0 |
| 21 | 0.0 |
| 22 | 0.0 |
| 23 | 0.0 |
| 24 | 0.0 |
| 25 | 0.0 |
| 26 | 0.0 |
| 27 | 0.0 |
| 28 | 0.0 |
| 29 | 0.0 |
| 30 | 0.0 |

Parameter list 4/4 File name: AIRFUEL1 1997. 1.23

==========

<<P Scales>>

| | 100% VALUE | 0% VALUE | DP |
|---|---|---|---|
| 01 | 1000 | 0 | 3 |
| 02 | 1000 | 0 | 3 |
| 03 | 1000 | 0 | 1 |
| 04 | 1000 | 0 | 3 |
| 05 | 1000 | 0 | 3 |
| 06 | 1000 | 0 | 3 |
| 07 | 1000 | 0 | 3 |
| 08 | 1000 | 0 | 3 |

<<K Constants 1/2>>

| | | |
|---|---|---|
| 01 | 100.0 | Scaling constant gain |
| 02 | 50.0 | Scaling constant bias |
| 03 | 100.0 | Air-fuel ratio span setting |
| 04 | 50.0 | Air-fuel ratio bias setting |
| 05 | 0.0 | |
| 06 | 0.0 | |
| 07 | 0.0 | |
| 08 | 0.0 | |
| 09 | 0.0 | |
| 10 | 0.0 | |
| 11 | 0.0 | |
| 12 | 0.0 | |
| 13 | 0.0 | |
| 14 | 0.0 | |
| 15 | 0.0 | |

<<K Constants 2/2>>

| | |
|---|---|
| 16 | 0.0 |
| 17 | 0.0 |
| 18 | 0.0 |
| 19 | 0.0 |
| 20 | 0.0 |
| 21 | 0.0 |
| 22 | 0.0 |
| 23 | 0.0 |
| 24 | 0.0 |
| 25 | 0.0 |
| 26 | 0.0 |
| 27 | 0.0 |
| 28 | 0.0 |
| 29 | 0.0 |
| 30 | 0.0 |

<<X Scales>>

| | 100% VALUE | 0% VALUE | DP |
|---|---|---|---|
| 01 | 1000 | 0 | 3 |
| 02 | 1000 | 0 | 3 |
| 03 | 1000 | 0 | 3 |
| 04 | 1000 | 0 | 3 |
| 05 | 1000 | 0 | 3 |

==========

# APPENDIX-C

***PROGRAM AND INTERNAL PARAMETERS LIST OF DRUM LEVEL AND FEEDWATER CONTROLLER***

Program list File name: FWC1 1997. 1.23

```
==================================================================
0001 ;----------------Feedwater drum level control-----------------
0002 ;
0003 ;Function:
0004 ;        -Provides level "single element" control during startup
0005 ;         when there is no steam production.
0006 ;        -Provides level "three element" control during normal
0007 ;         operation; cascade control including feedwater and
0008 ;         feedforward steam flow
0009 ;Inputs:
0010 ;        X1 : Level
0011 ;        X2 : Feedwater
0012 ;        X3 : Steam flow
0013 ;Outputs:
0014 ;        Y1 : Control output
0015 ;        DO1: Low alarm output
0016 ;        DO2: High alarm output
0017 ;Parameters:
0018 ;        P1 : Proportional gain "single element" control
0019 ;        P2 : Reset time "single element" control
0020 ;        P3 : Feedforward gain
0021 ;        P4 : Feedforward bias
0022 ;        P5 : Feedforward fiter time constant
0023 ;        P6 : Feedwater filter time constant
0024 ;        P7 : Minimum steam flow for three element control
0025 ;        P8 : Steam flow hysteris for P8
0026 ;---------------Single element control-----------------------
0027 LD PV1
0028 LD SV1
0029 -
0030 ST T2            ;Level deviation
0031 LD P1            ;Proportional gain single element control
0032 *
0033 LD P2            ;Reset time single element control
0034 /
0035 LD T3
0036 +
0037 ST T3            ;Totalized deviation single element control
0038 LD K29           ;K29=100.0
0039 CMP              ;T3 >= 100.0
0040 GIF @CONT1
0041 LD T3
0042 LD K30           ;K30=-100.0
0043 CMP              ;T3 >= 100.0
0044 GIF @CONT2
0045 LD K28           ;K28=0.0
0046 ST T3
0047 LD K1            ;K1=-0.2
0048 GO @CONT
0049 @CONT1
0050 LD K28           ;K28=0.0
0051 ST T3
0052 LD K2            ;K2=0.2
0053 GO @CONT
0054 @CONT2
0055 LD K28           ;K28=0.0
```

```
0056 @CONT
0057 LD T2
0058 LD T1
0059 -
0060 LD P1            ;Proportional gain
0061 *
0062 LD Y1            ;Control output
0063 +
0064 +
0065 ST TRK1          ;Tracking input CSC block used for single
0066                  ;                        element control
0067 ;---------------Tracking-----------------------------------------
0068 LD X3            ;Steam flow
0069 LD P7            ;Minimum steamflow for three element control
0070 LD P8            ;Hysteresis for P8
0071 LAL1
0072 ST TRKF1         ;Tracking switch
0073 ;---------------Three element control-----------------------------
0074 LD T2
0075 ST T1
0076 ;---------------Steam flow feedforward----------------------------
0077 LD X3            ;Steam flow
0078 LD P3            ;Feedforward gain
0079 *
0080 LD P4            ;Feedforward bias
0081 -
0082 LD P5            ;Feedforward filter time constant
0083 LAG1
0084 ST FF1           ;Feedforward input BSC1
0085 ;---------------Cascade control-----------------------------------
0086 LD X1            ;Level
0087 LD X2            ;Feedwater flow
0088 LD P6            ;Feedwater filter time constant
0089 LAG1
0090 CSC              ;Cascade control
0091 ST Y1            ;Control output
0092 ;---------------Alarms--------------------------------------------
0093 LD PLF1          ;Low alarm flag
0094 ST DO1
0095 LD PHF1          ;High alarm flag
0096 ST DO2
0097 END
```

==========

Parameter list 1/4 File name: FWC1 1997. 1.23

<<Configuration 1>>

| | | |
|---|---|---|
| CYCL | Control Period | 100ms |
| DIO1 | DI1/DO6 Set | IN |
| DIO2 | DI2/DO5 Set | IN |
| DIO3 | DI3/DO4 Set | IN |
| DIO4 | DI4/DO3 Set | IN |
| DIO5 | DI5/DO2 Set | OUT |
| DIO6 | DI6/DO1 Set | OUT |
| ATSEL | Auto Selector | LOW |
| START | Start Mode | TIM1 |

| <<Configuration 2-1>> | | | <<Configuration 2-2>> | |
|---|---|---|---|---|
| CMOD1 | Cascade Mode | - | CMOD2 | - |
| BMOD1 | Back Up Mode | BUM | BMOD2 | BUM |
| CNT1 | Control Type | PID | CNT2 | PID |
| ALG1 | Control Computation | I-PD | ALG2 | I-PD |
| ACT1 | Direct/Reverse Action | RVS | ACT2 | RVS |
| VDIR1 | Valve Action | C-O | VDIR2 | C-O |
| SCH1 | Scale(100%) | 1000 | SCH2 | 1000 |
| SCL1 | Scale(0%) | 0 | SCL2 | 0 |
| SCDP1 | Decimal Point | 3 | SCDP2 | 3 |
| SCDV1 | Scale Division | 1 | SCDV2 | 1 |
| UNIT1 | Unit | % | UNIT2 | % |
| TRDT1 | Trend Scale | 1M | TRDT2 | 1M |
| TAG1 | Tag No. | --LEVEL-- | TAG2 | FEEDWATR |

| <<PID Parameters 1>> | | | | <<PID Parameters 2>> | | |
|---|---|---|---|---|---|---|
| SV1 | SV initial start val | -6.3 | | SV2 | -6.3 | |
| PB1 | Proportional Band | 999.9 | % | PB2 | 999.9 | % |
| TI1 | Integral Time | 1000 | S | TI2 | 1000 | S |
| TD1 | Derivative Time | 0 | S | TD2 | 0 | S |
| SFA1 | SV Filter A | 0.000 | | SFA2 | 0.000 | |
| SFB1 | SV Filter B | 0.000 | | SFB2 | 0.000 | |
| GW1 | Non-Linear Gap | 0.0 | % | GW2 | 0.0 | % |
| GG1 | Non-Linear Gain | 1.000 | | GG2 | 1.000 | |
| PH1 | PV High Limit Alarm | 106.3 | | PH2 | 106.3 | |
| PL1 | PV Low Limit Alarm | -6.3 | | PL2 | -6.3 | |
| DL1 | Deviation Limit Alarm | 106.3 | | DL2 | 106.3 | |
| VL1 | Velocity Limit Alarm | 106.3 | | VL2 | 106.3 | |
| VT1 | V.L.A.Time Span | 1 | S | VT2 | 1 | S |
| MH1 | MV High Limit | 106.3 | % | MH2 | 106.3 | % |
| ML1 | MV Low Limit | -6.3 | % | ML2 | -6.3 | % |
| MR1 | Manual Reset | -6.3 | % | MR2 | -6.3 | % |
| RB1 | Reset Bias | 0.0 | % | RB2 | 0.0 | % |
| PMV1 | Preset MV | -6.3 | % | PMV2 | -6.3 | % |

<<Sample and Batch Control Parameters>>

| | | | | | | |
|---|---|---|---|---|---|---|
| STM1 | Sampling Period | 0 | S | STM2 | 0 | S |
| SWD1 | Control Time | 0 | S | SWD2 | 0 | S |
| BD1 | Deviation Set Point | 0.0 | % | BD2 | 0.0 | % |
| BB1 | Bias Value | 0.0 | % | BB2 | 0.0 | % |
| BL1 | Lock Up Span | 0.0 | % | BL2 | 0.0 | % |

Parameter list 2/4 File name: FWC1 1997. 1.23

| <<STC Parameters 1>> | | | <<STC Parameters 2>> | |
|---|---|---|---|---|
| STC | STC Operation Mode | OFF | | |
| IP1 | Process Type | STATIC | IP2 | STATIC |
| TR1 | Process Response Time | 300 S | TR2 | 300 S |
| NB1 | Noise Band | 0.0 | NB2 | 0.0 |
| OS1 | Control Target Type | MED | OS2 | MED |
| MI1 | MV Interference | 5.0 % | MI2 | 5.0 % |
| PMX1 | PB Upper Limit | 999.9 % | PMX2 | 999.9 % |
| PMN1 | PB Lower Limit | 2.0 % | PMN2 | 2.0 % |
| IMX1 | TI Upper Limit | 9999 S | IMX2 | 9999 S |
| IMN1 | TI Lower Limit | 1 S | IMN2 | 1 S |
| DMX1 | TD Upper Limit | 2000 S | DMX2 | 2000 S |

<<Preset PID Parameters>>

| | PB(%) | TI(S) | TD(S) |
|---|---|---|---|
| 01 | 999.9 | 1000 | 0 |
| 02 | 999.9 | 1000 | 0 |
| 03 | 999.9 | 1000 | 0 |
| 04 | 999.9 | 1000 | 0 |
| 05 | 999.9 | 1000 | 0 |
| 06 | 999.9 | 1000 | 0 |
| 07 | 999.9 | 1000 | 0 |
| 08 | 999.9 | 1000 | 0 |

<<Program Set Parameters>>

| | TIME(S) | OUTPUT(%) |
|---|---|---|
| 101 | 0 | 0.0 |
| 102 | 0 | 0.0 |
| 103 | 0 | 0.0 |
| 104 | 0 | 0.0 |
| 105 | 0 | 0.0 |
| 106 | 0 | 0.0 |
| 107 | 0 | 0.0 |
| 108 | 0 | 0.0 |
| 109 | 0 | 0.0 |
| 110 | 0 | 0.0 |

| <<FX1 Table>> | | <<FX2 Table>> | |
|---|---|---|---|
| | VALUE(%) | | VALUE(%) |
| 101 | 0.0 | 201 | 0.0 |
| 102 | 10.0 | 202 | 10.0 |
| 103 | 20.0 | 203 | 20.0 |
| 104 | 30.0 | 204 | 30.0 |
| 105 | 40.0 | 205 | 40.0 |
| 106 | 50.0 | 206 | 50.0 |
| 107 | 60.0 | 207 | 60.0 |
| 108 | 70.0 | 208 | 70.0 |
| 109 | 80.0 | 209 | 80.0 |
| 110 | 90.0 | 210 | 90.0 |
| 111 | 100.0 | 211 | 100.0 |

Parameter list 3/4 File name: FWC1 1997. 1.23

<<GX1 Table >>

| | INPUT(%) | OUTPUT(%) |
|---|---|---|
| 101 | 0.0 | 0.0 |
| 102 | 10.0 | 10.0 |
| 103 | 20.0 | 20.0 |
| 104 | 30.0 | 30.0 |
| 105 | 40.0 | 40.0 |
| 106 | 50.0 | 50.0 |
| 107 | 60.0 | 60.0 |
| 108 | 70.0 | 70.0 |
| 109 | 80.0 | 80.0 |
| 110 | 90.0 | 90.0 |
| 111 | 100.0 | 100.0 |

<<GX2 Table >>

| | INPUT(%) | OUTPUT(%) |
|---|---|---|
| 201 | 0.0 | 0.0 |
| 202 | 10.0 | 10.0 |
| 203 | 20.0 | 20.0 |
| 204 | 30.0 | 30.0 |
| 205 | 40.0 | 40.0 |
| 206 | 50.0 | 50.0 |
| 207 | 60.0 | 60.0 |
| 208 | 70.0 | 70.0 |
| 209 | 80.0 | 80.0 |
| 210 | 90.0 | 90.0 |
| 211 | 100.0 | 100.0 |

<<P Parameters 1/2>>

| | | |
|---|---|---|
| 01 | 1.000 | Proportional gain single element cntrl |
| 02 | 0.0 | Reset time single element control |
| 03 | 0.000 | Feedforward gain |
| 04 | 50.0 | Feedforward bias |
| 05 | 0.0 | Filter time constant steam flow |
| 06 | 0.0 | Filter time constant feedwater flow |
| 07 | 10.0 | Minimum steamflow for three element ctl |
| 08 | 2.0 | Hysteresis for P7 |
| 09 | 0.0 | |
| 10 | 0.0 | |
| 11 | 0.0 | |
| 12 | 0.0 | |
| 13 | 0.0 | |
| 14 | 0.0 | |
| 15 | 0.0 | |

<<P Parameters 2/2>>

| | |
|---|---|
| 16 | 0.0 |
| 17 | 0.0 |
| 18 | 0.0 |
| 19 | 0.0 |
| 20 | 0.0 |
| 21 | 0.0 |
| 22 | 0.0 |
| 23 | 0.0 |
| 24 | 0.0 |
| 25 | 0.0 |
| 26 | 0.0 |
| 27 | 0.0 |
| 28 | 0.0 |
| 29 | 0.0 |
| 30 | 0.0 |

Parameter list 4/4 File name: FWC1 1997. 1.23

<<P Scales>>

| | 100% VALUE | 0% VALUE | DP |
|---|---|---|---|
| 01 | 1000 | 0 | 1 |
| 02 | 1000 | 0 | 3 |
| 03 | 1000 | 0 | 1 |
| 04 | 1000 | 0 | 3 |
| 05 | 1000 | 0 | 3 |
| 06 | 1000 | 0 | 3 |
| 07 | 1000 | 0 | 3 |
| 08 | 1000 | 0 | 3 |

<<K Constants 1/2>>

| | |
|---|---|
| 01 | -0.2 |
| 02 | 0.2 |
| 03 | 0.0 |
| 04 | 0.0 |
| 05 | 0.0 |
| 06 | 0.0 |
| 07 | 0.0 |
| 08 | 0.0 |
| 09 | 0.0 |
| 10 | 0.0 |
| 11 | 0.0 |
| 12 | 0.0 |
| 13 | 0.0 |
| 14 | 0.0 |
| 15 | 0.0 |

<<K Constants 2/2>>

| | |
|---|---|
| 16 | 0.0 |
| 17 | 0.0 |
| 18 | 0.0 |
| 19 | 0.0 |
| 20 | 0.0 |
| 21 | 0.0 |
| 22 | 0.0 |
| 23 | 0.0 |
| 24 | 0.0 |
| 25 | 0.0 |
| 26 | 0.0 |
| 27 | 0.0 |
| 28 | 0.0 |
| 29 | 100.0 |
| 30 | -100.0 |

<<X Scales>>

| | 100% VALUE | 0% VALUE | DP |
|---|---|---|---|
| 01 | 1000 | 0 | 3 |
| 02 | 1000 | 0 | 3 |
| 03 | 1000 | 0 | 3 |
| 04 | 1000 | 0 | 3 |
| 05 | 1000 | 0 | 3 |

# APPENDIX-D

***PROGRAM AND INTERNAL PARAMETERS LIST OF MAIN-STEAM TEMPERATURE CONTROLLER***

Program list File name: STC1 1997. 1.23

```
==================================================================
0001 ;---------------Main steam temperature control----------------
0002 ;
0003 ;Function:
0004 ;        -Cascade control main steam temperature as master and
0005 ;         DSH outlet temperature as slave
0006 ;        -Input compensation to prevent wind-up
0007 ;        -Alarm function
0008 ;Inputs:
0009 ;        X1 : Main steam temperature
0010 ;        X2 : DSH outlet temperature
0011 ;        X3 : Steam flow
0012 ;Outputs:
0013 ;        Y1 : Control cooling
0014 ;Parameters:
0015 ;        P1 : Feedback signal display
0016 ;        P2 : Feedforward time constant
0017 ;        P3 : Feedforward bias
0018 ;        P4 : Maximum deviation
0019 ;        P5 : Feedback gain
0020 ;
0021 ;---------------Feedforward steamflow-------------------------
0022 LD X3            ;Steam flow
0023 GX1
0024 LD P2            ;Feedforward time constant
0025 LAG1
0026 LD P3            ;Feedforward bias
0027 +
0028 ST FF1           ;Feedforward CSC
0029 ;---------------Reset wind-up protection----------------------
0030 LD SV2           ;
0031 LD X2            ;DSH outlet temperature
0032 -
0033 ST T1            ;Deviation slave controller
0034 LD P4            ;Maximum deviation
0035 -
0036 LD K1            ;K1=0.0
0037 HSL
0038 LD T1            ;Deviation
0039 LD P4            ;Maximum deviation
0040 +
0041 LSL
0042 LD P5            ;Feedback gain
0043 *
0044 ST P1            ;Feedback signal
0045 ST DM1           ;Compensation input CSC
0046 ;---------------Cascade control-------------------------------
0047 LD X1            ;Main steam temperature
0048 LD X2            ;DSH outlet temperature
0049 CSC              ;Cascade control
0050 ST Y1            ;Control output cooling spray water
0051 ;--------------Alarms-----------------------------------------
0052 LD PLF1          ;Low alarm flag main steam temperature
0053 ST DO1
0054 LD PHF1          ;High alarm flag main steam temperature
0055 ST DO2
```

```
0056 ;---------------End of program--------------------------------
0057 END
```

==========

Parameter list 1/4 File name: STC1 1997. 1.23

<<Configuration 1>>

| | | |
|---|---|---|
| CYCL | Control Period | 100ms |
| DIO1 | DI1/DO6 Set | IN |
| DIO2 | DI2/DO5 Set | IN |
| DIO3 | DI3/DO4 Set | IN |
| DIO4 | DI4/DO3 Set | IN |
| DIO5 | DI5/DO2 Set | OUT |
| DIO6 | DI6/DO1 Set | OUT |
| ATSEL | Auto Selector | LOW |
| START | Start Mode | TIM1 |

| <<Configuration 2-1>> | | | <<Configuration 2-2>> | |
|---|---|---|---|---|
| CMOD1 | Cascade Mode | - | CMOD2 | - |
| BMOD1 | Back Up Mode | BUM | BMOD2 | BUM |
| CNT1 | Control Type | PID | CNT2 | PID |
| ALG1 | Control Computation | I-PD | ALG2 | I-PD |
| ACT1 | Direct/Reverse Action | RVS | ACT2 | RVS |
| VDIR1 | Valve Action | C-O | VDIR2 | C-O |
| SCH1 | Scale(100%) | 1000 | SCH2 | 1000 |
| SCL1 | Scale(0%) | 0 | SCL2 | 0 |
| SCDP1 | Decimal Point | 3 | SCDP2 | 3 |
| SCDV1 | Scale Division | 1 | SCDV2 | 1 |
| UNIT1 | Unit | % | UNIT2 | % |
| TRDT1 | Trend Scale | 1M | TRDT2 | 1M |
| TAG1 | Tag No. | MAINTEMP | TAG2 | --TEMP-- |

| <<PID Parameters 1>> | | | | <<PID Parameters 2>> | | |
|---|---|---|---|---|---|---|
| SV1 | SV initial start val | -6.3 | | SV2 | -6.3 | |
| PB1 | Proportional Band | 999.9 | % | PB2 | 999.9 | % |
| TI1 | Integral Time | 1000 | S | TI2 | 1000 | S |
| TD1 | Derivative Time | 0 | S | TD2 | 0 | S |
| SFA1 | SV Filter A | 0.000 | | SFA2 | 0.000 | |
| SFB1 | SV Filter B | 0.000 | | SFB2 | 0.000 | |
| GW1 | Non-Linear Gap | 0.0 | % | GW2 | 0.0 | % |
| GG1 | Non-Linear Gain | 1.000 | | GG2 | 1.000 | |
| PH1 | PV High Limit Alarm | 106.3 | | PH2 | 106.3 | |
| PL1 | PV Low Limit Alarm | -6.3 | | PL2 | -6.3 | |
| DL1 | Deviation Limit Alarm | 106.3 | | DL2 | 106.3 | |
| VL1 | Velocity Limit Alarm | 106.3 | | VL2 | 106.3 | |
| VT1 | V.L.A.Time Span | 1 | S | VT2 | 1 | S |
| MH1 | MV High Limit | 106.3 | % | MH2 | 106.3 | % |
| ML1 | MV Low Limit | -6.3 | % | ML2 | -6.3 | % |
| MR1 | Manual Reset | -6.3 | % | MR2 | -6.3 | % |
| RB1 | Reset Bias | 0.0 | % | RB2 | 0.0 | % |
| PMV1 | Preset MV | -6.3 | % | PMV2 | -6.3 | % |

<<Sample and Batch Control Parameters>>

| | | | | | | |
|---|---|---|---|---|---|---|
| STM1 | Sampling Period | 0 | S | STM2 | 0 | S |
| SWD1 | Control Time | 0 | S | SWD2 | 0 | S |
| BD1 | Deviation Set Point | 0.0 | % | BD2 | 0.0 | % |
| BB1 | Bias Value | 0.0 | % | BB2 | 0.0 | % |
| BL1 | Lock Up Span | 0.0 | % | BL2 | 0.0 | % |

Parameter list 2/4 File name: STC1 1997. 1.23

| <<STC Parameters 1>> | | | <<STC Parameters 2>> | |
|---|---|---|---|---|
| STC | STC Operation Mode | OFF | | |
| IP1 | Process Type | STATIC | IP2 | STATIC |
| TR1 | Process Response Time | 300 S | TR2 | 300 S |
| NB1 | Noise Band | 0.0 | NB2 | 0.0 |
| OS1 | Control Target Type | MED | OS2 | MED |
| MI1 | MV Interference | 5.0 % | MI2 | 5.0 % |
| PMX1 | PB Upper Limit | 999.9 % | PMX2 | 999.9 % |
| PMN1 | PB Lower Limit | 2.0 % | PMN2 | 2.0 % |
| IMX1 | TI Upper Limit | 9999 S | IMX2 | 9999 S |
| IMN1 | TI Lower Limit | 1 S | IMN2 | 1 S |
| DMX1 | TD Upper Limit | 2000 S | DMX2 | 2000 S |

<<Preset PID Parameters>>

| | PB(%) | TI(S) | TD(S) |
|---|---|---|---|
| 01 | 999.9 | 1000 | 0 |
| 02 | 999.9 | 1000 | 0 |
| 03 | 999.9 | 1000 | 0 |
| 04 | 999.9 | 1000 | 0 |
| 05 | 999.9 | 1000 | 0 |
| 06 | 999.9 | 1000 | 0 |
| 07 | 999.9 | 1000 | 0 |
| 08 | 999.9 | 1000 | 0 |

<<Program Set Parameters>>

| | TIME(S) | OUTPUT(%) |
|---|---|---|
| 101 | 0 | 0.0 |
| 102 | 0 | 0.0 |
| 103 | 0 | 0.0 |
| 104 | 0 | 0.0 |
| 105 | 0 | 0.0 |
| 106 | 0 | 0.0 |
| 107 | 0 | 0.0 |
| 108 | 0 | 0.0 |
| 109 | 0 | 0.0 |
| 110 | 0 | 0.0 |

<<FX1 Table>>

| | VALUE(%) |
|---|---|
| 101 | 0.0 |
| 102 | 10.0 |
| 103 | 20.0 |
| 104 | 25.0 |
| 105 | 30.0 |
| 106 | 35.0 |
| 107 | 40.0 |
| 108 | 45.0 |
| 109 | 48.0 |
| 110 | 50.0 |
| 111 | 50.0 |

<<FX2 Table>>

| | VALUE(%) |
|---|---|
| 201 | 0.0 |
| 202 | 10.0 |
| 203 | 20.0 |
| 204 | 30.0 |
| 205 | 40.0 |
| 206 | 50.0 |
| 207 | 60.0 |
| 208 | 70.0 |
| 209 | 80.0 |
| 210 | 90.0 |
| 211 | 100.0 |

Parameter list 3/4 File name: STC1 1997. 1.23

<<GX1 Table >>

| | INPUT(%) | OUTPUT(%) |
|---|---|---|
| 101 | 0.0 | 0.0 |
| 102 | 10.0 | 10.0 |
| 103 | 20.0 | 20.0 |
| 104 | 25.0 | 30.0 |
| 105 | 30.0 | 40.0 |
| 106 | 35.0 | 50.0 |
| 107 | 40.0 | 60.0 |
| 108 | 43.0 | 70.0 |
| 109 | 46.0 | 80.0 |
| 110 | 48.0 | 90.0 |
| 111 | 50.0 | 100.0 |

<<GX2 Table >>

| | INPUT(%) | OUTPUT(%) |
|---|---|---|
| 201 | 0.0 | 0.0 |
| 202 | 10.0 | 10.0 |
| 203 | 20.0 | 20.0 |
| 204 | 30.0 | 30.0 |
| 205 | 40.0 | 40.0 |
| 206 | 50.0 | 50.0 |
| 207 | 60.0 | 60.0 |
| 208 | 70.0 | 70.0 |
| 209 | 80.0 | 80.0 |
| 210 | 90.0 | 90.0 |
| 211 | 100.0 | 100.0 |

<<P Parameters 1/2>>

| | | |
|---|---|---|
| 01 | 0.0 | Feedback signal display |
| 02 | 0.0 | Feedforward time constant |
| 03 | 0.0 | Feedforward bias |
| 04 | 0.0 | Maximum deviation |
| 05 | 0.000 | Feedback gain |
| 06 | 0.0 | |
| 07 | 0.0 | |
| 08 | 0.0 | |
| 09 | 0.0 | |
| 10 | 0.0 | |
| 11 | 0.0 | |
| 12 | 0.0 | |
| 13 | 0.0 | |
| 14 | 0.0 | |
| 15 | 0.0 | |

<<P Parameters 2/2>>

| | |
|---|---|
| 16 | 0.0 |
| 17 | 0.0 |
| 18 | 0.0 |
| 19 | 0.0 |
| 20 | 0.0 |
| 21 | 0.0 |
| 22 | 0.0 |
| 23 | 0.0 |
| 24 | 0.0 |
| 25 | 0.0 |
| 26 | 0.0 |
| 27 | 0.0 |
| 28 | 0.0 |
| 29 | 0.0 |
| 30 | 0.0 |

Parameter list 4/4 File name: STC1 1997. 1.23

==========

<<P Scales>>

| | 100% VALUE | 0% VALUE | DP |
|---|---|---|---|
| 01 | 1000 | 0 | 3 |
| 02 | 1000 | 0 | 3 |
| 03 | 1000 | 0 | 3 |
| 04 | 1000 | 0 | 3 |
| 05 | 1000 | 0 | 1 |
| 06 | 1000 | 0 | 3 |
| 07 | 1000 | 0 | 3 |
| 08 | 1000 | 0 | 3 |

<<K Constants 1/2>>

| | |
|---|---|
| 01 | 0.0 |
| 02 | 0.0 |
| 03 | 0.0 |
| 04 | 0.0 |
| 05 | 0.0 |
| 06 | 0.0 |
| 07 | 0.0 |
| 08 | 0.0 |
| 09 | 0.0 |
| 10 | 0.0 |
| 11 | 0.0 |
| 12 | 0.0 |
| 13 | 0.0 |
| 14 | 0.0 |
| 15 | 0.0 |

<<K Constants 2/2>>

| | |
|---|---|
| 16 | 0.0 |
| 17 | 0.0 |
| 18 | 0.0 |
| 19 | 0.0 |
| 20 | 0.0 |
| 21 | 0.0 |
| 22 | 0.0 |
| 23 | 0.0 |
| 24 | 0.0 |
| 25 | 0.0 |
| 26 | 0.0 |
| 27 | 0.0 |
| 28 | 0.0 |
| 29 | 0.0 |
| 30 | 0.0 |

<<X Scales>>

| | 100% VALUE | 0% VALUE | DP |
|---|---|---|---|
| 01 | 1000 | 0 | 3 |
| 02 | 1000 | 0 | 3 |
| 03 | 1000 | 0 | 3 |
| 04 | 1000 | 0 | 3 |
| 05 | 1000 | 0 | 3 |

==========